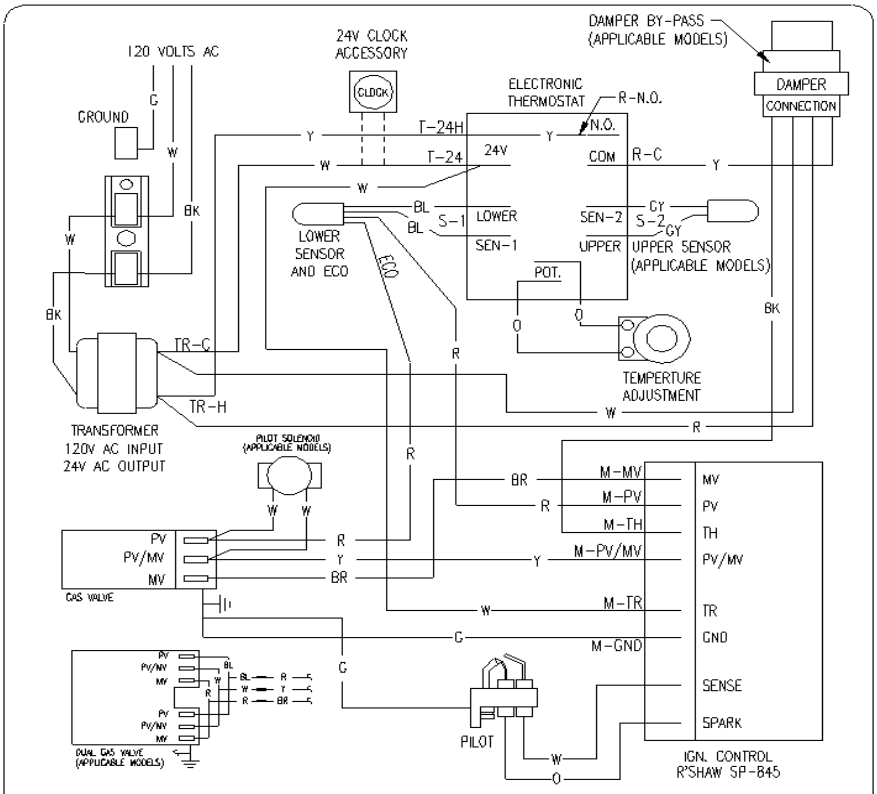

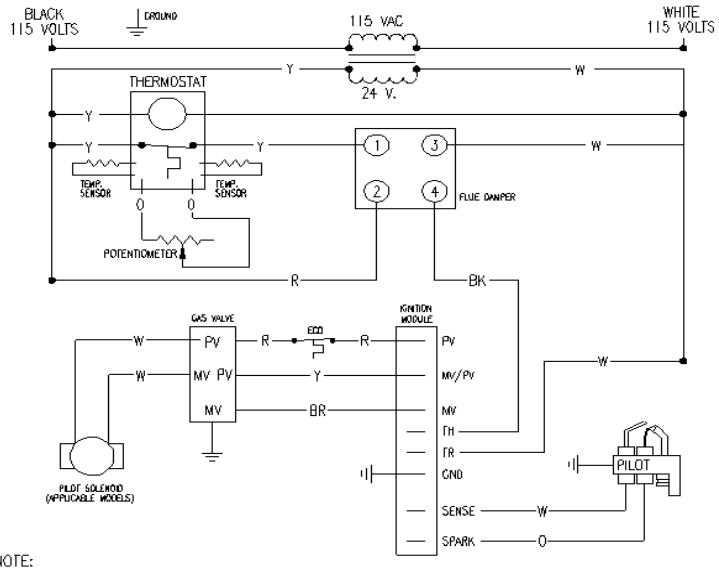

NOTE:
IF ANY OF THE ORIGINAL WIRES AS SUPPLIED WITH THE APPLIANCE MUST BE REPLACED.
IT MUST BE REPLACED WITH 18. GA STRANDED 105° WIRE OR ITS EQUIVALENT.

238-82041-008