GAS-FIRED COMMERCIAL WATER HEATER

(Ultra Low NOx)

INSTALLATION/OPERATION MANUAL

WITH TROUBLESHOOTING GUIDE

⚠ WARNING

If the information in these instructions is not followed exactly, a fire or explosion may result causing property damage, personal injury or death.

DO NOT store or use gasoline or other flammable vapors and liquids in the vicinity of this or any other appliance.

WHAT TO DO IF YOU SMELL GAS

- **DO NOT try to light any appliance.**
- **DO NOT touch any electrical switch; DO NOT use any phone in your building.**
- **Immediately call your gas supplier from a neighbor's phone. Follow the gas supplier's instructions.**
- **If you cannot reach your gas supplier, call the fire department.**

For customer comfort, safety, and convenience, it is recommended this water heater be installed and serviced by a plumbing professional.

WARNING
CANCER AND REPRODUCTIVE HARM
WWW.P65WARNINGS.CA.GOV

As required by the state of California Proposition 65.

238-50463-00M REV 04/21

SAVE THESE INSTRUCTIONS AND KEEP FOR FUTURE REFERENCE

SECTION I: IMPORTANT INFORMATION

READ CAREFULLY

This gas-fired water heater is design certified by CSA International under the American National Standard, Z21.10.3 (as indicated on the rating plate) and CAN/CGA 4.3-M (as indicated on the rating plate) available from CSA Standards Association, 5060 Spectrum Way, Mississauga, Ontario, CANADA L4W 5N6.
This water heater must be installed in accordance with local codes. In the absence of local codes, it must be installed in compliance with the National Fuel Gas Code (ANSI Z223.1-Latest Edition), or in Canada CAN/CGA B149.1 Natural Gas Installation Code (Latest Edition) or CAN/CGA B149.2 Propane Installation Code (Latest Edition).

The following terms are used throughout this manual to bring attention to the presence of hazards at various risk levels, or to important information concerning product life.

⚠ DANGER

Indicates an imminently hazardous situation, which, if not avoided, will result in death, serious injury or substantial property damage.

⚠ CAUTION

Indicates potentially hazardous situation, which, if not avoided, may result in moderate or minor injury or property damage.

⚠ WARNING

Indicates a potentially hazardous situation, which, if not avoided, could result in death, serious injury or substantial property damage.

NOTICE

Indicates special instructions on installation, operation or maintenance, which are important but not related to personal injury hazards.

NOTICE

This water heater has a limited warranty. The warranty for this water heater is valid only if the water heater has been installed, maintained, and operated in accordance with these instructions.

TABLE OF CONTENTS

Section I: Important Information..... 2
Section II: Specifications..... 5
Section III: General Information..... 6
Section IV: Installation Instructions 8
Section V: Venting 13
Section VI: Water Connections..... 21
Section VII: Gas Connections 23
Section VIII: Electrical Connections.....25
Section IX: Operating Instructions.....28
Section X: Maintenance.....35
Section XI: Service And Troubleshooting Guide 39
Notes.....46

⚠ DANGER

DO NOT store or use gasoline or other flammable, combustible, or corrosive vapors and/or liquids in the vicinity of this or any other appliance.

This water heater is equipped with an adjustable thermostat to control water temperature. Hot water temperatures required for automatic dishwasher and laundry use can cause scald burns resulting in serious personal injury and/or death. The temperature at which injury occurs varies with the person's age and the time of exposure. The slower response time of the elderly and disabled persons increases the hazards to them. **NEVER** allow small children to use a hot water tap or to draw their own bath water. **NEVER** leave a child or disabled person unattended in a bathtub or shower.

Toxic chemicals, such as those used for boiler treatment, **must NOT** be introduced into potable water used for space heating.

This water heater **must NOT** be connected to an existing heating system or component(s) previously used with a non-potable water heating appliance.

All piping components connected to this water heater for space heating applications **must** be suitable for use with potable water.

⚠ WARNING

Improper installation, adjustments, alteration, service, or maintenance can cause property damage, personal injury, or loss of life. Failure to follow all instructions in the proper order can cause personal injury or death. Read and understand all instructions, including all those provided with the appliance before installing, starting up, operating, maintaining, or servicing this appliance. Keep this manual in legible condition with this water heater for reference by owner or service technician.

This water heater requires regular maintenance and service to operate safely. Follow the instructions contained in this manual.

Installation, maintenance, and service **must** be performed only by a qualified, skilled, and knowledgeable installer or service provider.

Installation is **NOT** complete unless a temperature and pressure relief valve is installed into the proper location at the top of this water heater.

It is the responsibility of the installing contractor to see that all controls are correctly installed and are properly operating when the installation is complete.

This water heater is suitable for installation on combustible flooring. **DO NOT** install water heater directly on carpeting.

DO NOT operate this water heater without first being certain it is filled with water.

DO NOT tamper with or alter the water heater and/or controls.

DO NOT operate the water heater with jumpered or absent controls/safety devices.

DO NOT operate the water heater if any external part has been under water. Immediately call a qualified service technician to inspect the appliance and to replace any part of the control system, including gas controls, that has been under water.

DO NOT attempt to use this water heater with any gas other than the type listed on the rating plate. **DO NOT** attempt to convert this water heater for use with a gas other than the type for which it is equipped. Failure to use the proper gas can create an unsafe condition resulting in property damage, bodily injury, or death. Consult your local gas supplier or gas company if there are any questions.

Incorrect operation of this appliance may create a hazard to life and property and will nullify the warranty.

DO NOT operate this water heater if the input rate exceeds the rate shown on the water heater rating plate.

This water heater contains very hot water under high pressure. **DO NOT** unscrew any pipe fittings or attempt to disconnect any components of this water heater without positively assuring the water is cool and is not under pressure. Always wear protective clothing and equipment when installing, starting up or servicing this water heater to prevent scald injuries. **DO NOT** rely on the temperature gauges to determine the temperature. **DO NOT** touch any components unless they are cool.

This water heater must be properly vented and connected to an approved vent system in good condition. **DO NOT** operate water heater with the absence of an approved vent system. A clean and unobstructed vent system is necessary to allow noxious fumes that could cause injury or loss of life to vent safely and will contribute toward maintaining the water heater's efficiency.

⚠ WARNING

This water heater needs fresh air for safe operation and must be installed with provisions for adequate combustion and ventilation air. Insufficient air supply will cause a recirculation of combustion products resulting in contamination that may be hazardous to life. This will result in carboning or sooting of the combustion chamber, burner, and flue tubes and creates a risk of asphyxiation.

Flammable items, pressurized containers, or any other potential fire hazardous articles must **NEVER** be placed on or adjacent to the water heater. Open containers of flammable material should **NOT** be stored or used in the same room with this water heater.

Insulation blankets are **not** required for this water heater. This water heater meets or exceeds the ASHRAE/IES 90.1b (Latest Edition) standards with respect to insulation and standby loss requirements.

Setting the water temperature to the maximum set point can result in scalding hot water delivered to the faucets. It is highly recommended that the maximum setpoint be adjusted to the lowest temperature possible for the needs of the installation. See Section XI: Operating Instructions in this Installation and Operation Manual to change the maximum setpoint limit (max setpoint). Make sure the water heater control display is **NOT** in a public area that can result in the temperature settings being improperly adjusted.

Hydrogen gas can be produced in an operating water heater that has not had water drawn from the tank for a long period of time (generally two weeks or more). **HYDROGEN GAS IS EXTREMELY FLAMMABLE.** To prevent the possibility of injury under these conditions, we recommend the hot water faucet to be open for several minutes at the kitchen sink before you use any electrical appliance, which is connect to the hot water system. If hydrogen is present, there will be unusual sounds such as air escaping through the pipes as hot water begins to flow. **DO NOT** smoke or have open flame near the faucet at the time it is open.

⚠ WARNING

Liquefied petroleum gases/propane gas is heavier than air and will remain at floor level if there is a leak. Basements, crawl spaces, closets and areas below ground level will serve as pockets for accumulation of leaking gas. Before lighting, smell all around the appliance area for gas. Be sure to smell next to the floor.

IF YOU SMELL GAS:

- **DO NOT** try to light any appliance.
- **DO NOT** touch any electric switch; **DO NOT** use any telephone in your building.
- Immediately call your gas supplier from a telephone in another building. Follow the gas supplier's instructions.
- If you cannot reach your gas supplier, call the fire department.

DO NOT OPERATE THE APPLIANCE UNTIL THE LEAKAGE IS CORRECTED!

NSF Compliance

To comply with NSF (National Sanitation Foundation) requirements, this water heater is to be sealed to the floor with sealant, in a smooth and easily cleanable way.

SECTION II: SPECIFICATIONS

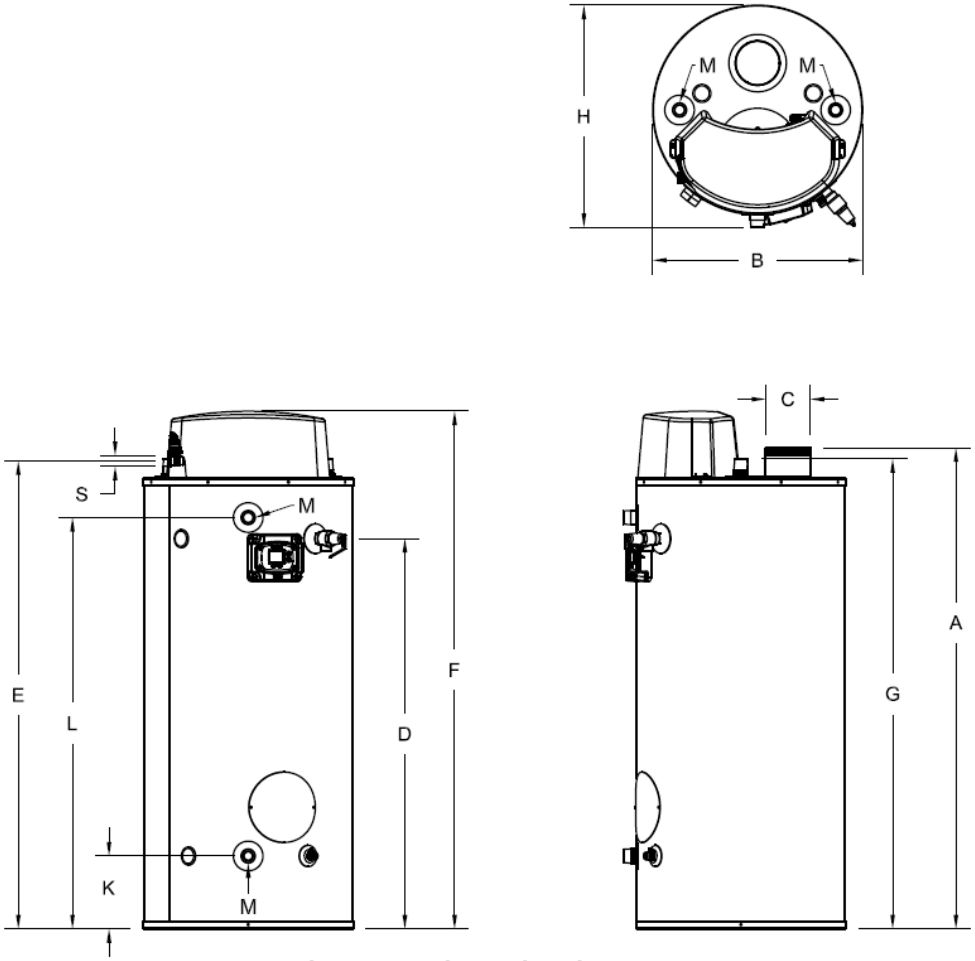

Figure 1 – Dimensional Layout

Table 1 – Specifications

Model Description						Dimensions (inches)													
Model Number	Nominal Gal. Capacity US Gal	Imp. Gal.	BTU/Hr. Input	GPH Recovery at Degree Rise 40°F	100°F	140°F	A Floor to Vent Conn. in.	B Jacket Dia. in.	C Vent Size in.	D Floor to T&P Conn. in.	E Floor to Gas Conn. In.	F Floor to Top of Heater In.	G Floor to Cold Water Conn./Hot Water Conn. In.	H Depth in.	K Floor to Cold Water Conn. in.	L Floor to Hot Water Conn. in.	M Water Conn. NPT in.	S Gas Conn. Size in.	Relief Valve Open in.	Aprox. Shipping Weight lbs.
UCG80H125	80	67	125,000	308	123	88	57	28	5	44 1/4	54 1/2	61 3/8	55 3/4	30	9 3/4	46 15/16	1 1/2	3/4	3/4	535
UCG80H199	80	67	199,999	493	197	141	57	28	6	44 1/4	54 1/2	61 3/8	55 3/4	30	9 3/4	46 15/16	1 1/2	3/4	3/4	535
UCG80H270	80	67	270,000	665	266	190	57	28	6	44 1/4	54 1/2	61 3/8	55 3/4	30	9 3/4	46 15/16	1 1/2	3/4	1	545
UCG80H399	80	67	399,999	960	384	274	57	28	8	44 1/4	54 1/2	61 3/8	55 3/4	30	9 3/4	46 15/16	1 1/2	3/4	1	545
UCG100H199	100	83	199,999	493	197	141	64 7/8	28	6	52 3/4	62 3/4	70	63 1/4	30	9 3/4	55 3/8	1 1/2	3/4	3/4	632
UCG100H270	100	83	270,000	665	266	190	64 7/8	28	6	52 3/4	62 3/4	70	63 1/4	30	9 3/4	55 3/8	1 1/2	3/4	1	632
UCG100H399	100	83	399,999	994	398	284	64 7/8	28	8	52 3/4	62 3/4	70	63 1/4	30	9 3/4	55 3/8	1 1/2	3/4	1	657

Model Description						Dimensions (millimeters)													
Model Number	Nominal Liter Capacity	Input kW	GPH Recovery at Degree Rise 22°C	56°C	78°C	A Floor to Vent Conn. mm.	B Jacket Dia. mm.	C Vent Size mm.	D Floor to T&P Conn. mm.	E Floor to Gas Conn. mm.	F Floor to Top of Heater mm.	G Floor to Water Conn. mm.	H Depth mm.	K Floor to Space Heating Inlet mm.	L Floor to Space Heating Outlet mm.	M Water Conn. NPT mm.	S Gas Conn. Size mm.	Relief Valve Open mm.	Aprox. Shipping Weight kgs.
UCG80H125	303	36.6	1164	466	333	1448	711	127	1124	1384	1569	1416	752	247	1192	38	19	19	243
UCG80H199	303	58.6	1864	746	533	1448	711	152	1124	1384	1569	1416	752	247	1192	38	19	19	243
UCG80H270	303	79.1	2517	1007	719	1448	711	152	1124	1384	1569	1416	752	247	1192	38	19	25	247
UCG80H399	303	117.2	3634	1454	1038	1448	711	203	1124	1384	1569	1416	752	247	1192	38	19	25	247
UCG100H199	379	58.6	1866	745	533	1648	711	152	1340	1594	1778	1606	752	247	1406	38	19	19	286
UCG100H270	379	79.1	2517	1006	719	1648	711	152	1340	1594	1778	1606	752	247	1406	38	19	25	286
UCG100H399	379	117.2	3757	1476	1060	1648	711	203	1340	1594	1778	1606	752	247	1406	38	19	25	298

SECTION III: GENERAL INFORMATION

This water heater contains the following features:

Main Power On/Off Switch

The front panel of this water heater has an ON/OFF switch, which has markings when the main power is turned on to indicate power to the water heater.

Combustion System

This water heater is equipped with a self-compensating negative pressure pre-mix combustion system. As the blower operates, air is drawn in through the air intake and into a venturi, which pulls gas from the gas valve. The gas and air are then mixed in the combustion blower and sent through the transition tube into the burner. The Direct Spark Ignition (DSI) System then ignites the gas/air fuel mixture to produce flue products (combustion). The flame sensor signals the ignition control board (described below) that a flame is present.

ICON Systems Control

The ICON Systems Control consists of a control board and a digital water heater display. The digital water heater display is on the top front of the water heater for setting and displaying the temperature setpoint and monitoring the status of the water heater. Pressing the temperature UP and DOWN buttons changes the temperature setpoint. The temperature format may be displayed in degrees F or degrees C. The water heater display will show service codes in the event the water heater needs servicing. The temperature readings of the tank sensor can be monitored in Service Mode. The display can show up to 10 previous error codes in Service Mode to further aid in servicing the water heater.

The single control board has plug in wiring harnesses to reduce the chance of mis-wiring. The control board controls all ignition, temperature, and combustion blower functions. The control board controls the combustion blower, ignition timings, and gas valve to control the combustion system in order to maintain the desired tank temperature. The sequence of operation is described in detail in the Service section at the back of this Installation and Operating Instruction Manual.

Adjustable Thermostat

This water heater is equipped with an adjustable thermostat as part of the ICON Systems Control to control water temperature. Hot water temperatures required for automatic dishwasher and laundry use can cause scald burns, resulting in serious personal injury and/or death.

The temperature may be adjusted from about 100°F *(37.8°C)* to about 180°F *(82°C)*. The thermostat was adjusted to 100°F *(37.8°C)* before the water heater was shipped from the factory. It is recommended that lower temperatures be used to avoid the risk of scalding. Refer to the scald warnings and the section on scalding in Section V: Water Connections. It is further recommended, in all cases, that the water temperature be set for the lowest temperature that satisfies your hot water requirements for the installation. This will also provide the most energy efficient operation of the water heater and minimizes scale formation. Setting the water heater temperature at 120°F *(49°C)* will reduce the risk of scalds. Some states require setting lower temperatures for specific installations.

The top immersion well of the single sensor control also contains a redundant sensor for the high limit (energy cutoff). The high limit circuit interrupts the main burner gas flow should the water temperature exceed approximately 207°F *(97.2°C)*. Error code “80” will be shown on the water heater control display if the high limit temperature has been exceeded. Should the high limit switch activate, it must be manually reset. This should only be done by a service technician after the cause of overheating has been corrected. Refer to the section on “Accessing Service Mode on the Display” in the Service section of this Installation and Operation Manual. Contact your qualified installing contractor, service provider or manufacturer listed on the rating plate if continued high limit operation occurs.

Latches

The latches allow easy access for servicing the water heater from the top. Remove the two latches for servicing and re-latch upon completion. No tools are required to obtain access to the top of the water heater. Replace the surround and re-latch when the service has been completed.

Dishwashing Machine Requirements

All dishwashing machines meeting the National Sanitation Foundation requirements are designed to operate with water flow pressures between 15 and 25 lbs/in^2. Flow pressures above 25 lbs/in^2 or below 15 lbs/in^2 will result in improperly sanitized dishes.

The National Sanitation Foundation also recommends circulation of 180°F *(82°C)* water. Where this is done, the circulation should be very gentle so that it does not cause any unnecessary turbulence inside the water heater. The circulation should be just enough to provide 180°F *(82°C)* water at the point of take-off to the dishwashing machine. Adjust flow by means of the valve in the circulation line.

Temperature and Pressure Relief Valve

⚠ WARNING

Keep clear of combination temperature and pressure relief valve discharge line outlet. The discharge may be hot enough to cause scald injury. The water is under pressure and may splash.

For protection against excessive temperatures and pressure, install temperature and pressure protective equipment required by local codes; **not** less than a combination temperature and pressure relief valve certified by a nationally recognized testing laboratory that maintains periodic inspection of production of listed equipment or materials as meeting the requirements of the Standard for *Relief Valves and Automatic Gas Shutoff Devices for Hot Water Supply Systems, ANSI Z21.22* and the Standard *CAN1-4.4 Temperature, Pressure, Temperature and Pressure Relief Valves and Vacuum Relief Valves*. The combination temperature and pressure relief valve must be marked with a maximum set pressure that does **NOT** exceed the maximum working pressure of the water heater. The combination temperature and pressure relief valve rating must **NOT** be less than the hourly rating of the water heater.

Install the combination temperature and pressure relief valve into the opening provided and marked for this purpose on the water heater.

Note: Some models may already be equipped or supplied with a combination temperature and pressure relief valve. Verify that the combination temperature and pressure relief valve is in compliance with local codes. If the combination temperature and pressure relief valve does not comply with local codes, replace it with one that does. Follow the installation instructions above on this page.

Install a discharge line so that water discharged from the combination temperature and pressure relief valve will exit within 6 in *(15.2 cm)* above, or any distance below the structural floor and **cannot** contact any live electrical part. The discharge line is to be installed to allow for complete drainage of both the combination temperature and pressure relief valve and the discharge line where it will **NOT** damage property. The discharge opening must **NOT** be subjected to blockage or freezing. **DO NOT** thread, plug, or cap the discharge line. It is recommended that a minimum clearance of 4 in *(10.2 cm)* be provided on the side of the water heater for servicing and maintenance of the combination temperature and pressure relief valve.

DO NOT place a valve between the combination temperature and pressure relief valve and the tank.

Hydrogen gas can be produced in an operating water heater that has not had water drawn from the tank for a long period of time (generally two weeks or more). **HYDROGEN GAS IS EXTREMELY FLAMMABLE.** To prevent the possibility of injury under these conditions, we recommend the hot water faucet to be open for several minutes at the kitchen sink before you use any electrical appliance which is connected to the hot water system. If hydrogen is present, there will be an unusual sound such as air escaping through the pipes as hot water begins to flow. **DO NOT** smoke or have open flame near the faucet at the time it is open.

Sacrificial Anodes

Three sacrificial anode rods have been installed in the tank head to extend tank life. The anode rods should be inspected periodically for corrosion and replaced when necessary to prolong tank life. Water conditions in your area will influence the time interval for inspection and replacement of the anode rods. The use of a water softener may increase the speed of anode consumption. More frequent inspection of the anodes is needed when using softened (or phosphate treated) water. In areas where water is unusually active, an odor may occur at the hot water faucet due to a reaction between the sacrificial anode and the impurities in the water. If this should happen, alternative anodes may be purchased from the supplier that installed this water heater. This will minimize the odor while protecting the tank. Additionally, the water heater should be flushed with appropriate dissolvers to eliminate any bacteria.

The removal of these anodes, except for inspection and/or replacement, will nullify the warranty. Contact the installing contractor or service provider that installed the water heater, or the manufacturer listed on the rating plate for anode replacement information.

SECTION IV: INSTALLATION INSTRUCTIONS

⚠ WARNING

INSTALLATION OF THIS WATER HEATER SHOULD BE DONE BY A TRAINED AND QUALIFIED PROFESSIONAL. PLUMBING, AIR SUPPLY, VENTING, GAS SUPPLY AND ELECTRICAL WORK ARE REQUIRED.

DO NOT ATTEMPT TO LIGHT ANY GAS APPLIANCE IF YOU ARE NOT CERTAIN OF THE FOLLOWING:

- Liquefied petroleum gases/propane gas and natural gas have an odorant added by the gas supplier that aids in detection of the gas.
- Most people recognize this odor as a “sulfur” or “rotten egg” smell.
- Other conditions, such as “odorant fade” can cause the odorant to diminish in intensity, or “fade”, and not be as readily detectable.
- If you have a diminished sense of smell or are in any way unsure of the presence of gas, immediately contact your gas supplier from a telephone in another building.
- Gas detectors are available. Contact your gas supplier or plumbing professional for more information.

Liquefied petroleum gases/propane gas is heavier than air and will remain at floor level if there is a leak. Basements, crawl spaces, closets and areas below ground level will serve as pockets for accumulation of leaking gas. Before lighting, smell all around the appliance area for gas. Be sure to smell next to the floor.

IF YOU SMELL GAS:

- **DO NOT** try to light any appliance.
- **DO NOT** touch any electric switch; **DO NOT** use any telephone in your building.
- Immediately call your gas supplier from a telephone in another building. Follow the gas supplier’s instructions.
- If you cannot reach your gas supplier, call the fire department.

DO NOT OPERATE THE APPLIANCE UNTIL THE LEAKAGE IS CORRECTED!

This water heater **must** be located in an area where leakage of the tank, water line connections, or the combination temperature and pressure relief valve will **NOT** result in damage to the area adjacent to the water heater or to lower floors of the structure. When such locations cannot be avoided, a suitable drain pan **must** be installed under the water heater. The drain pan depth must be suitable for draining and collecting water and have a minimum diameter of at least 4 in *(10.2 cm)* measured from the jacket of the water heater. The drain pan can be purchased from your plumbing professional. The water heater may need to be placed on blocks inside drain pan to fit in a standard size pan. The drain pan must be piped to an adequate drain. The piping must be at least ¾ inch *(2 cm)* in diameter and pitched for proper drainage.

Water heaters are heat producing appliances. To avoid damage or injury there must be no materials stored against the water heater and proper care must be taken to avoid unnecessary contact (especially by children) with the water heater components. **UNDER NO CIRCUMSTANCES SHOULD FLAMMABLE MATERIALS, SUCH AS GASOLINE OR PAINT THINNER BE USED OR STORED IN THE VICINITY OF THIS WATER HEATER, VENT-AIR INTAKE SYSTEM OR IN ANY LOCATION FROM WHICH FUMES COULD REACH THE WATER HEATER OR VENT-AIR INTAKE SYSTEM.**

Failure to adhere to these Installation and Operation Instructions may create a hazard to life and property and will nullify the warranty.

⚠ CAUTION

The National Fuel Gas Code (ANSI Z233.1- latest edition) or in Canada The Natural Gas Installation Code CAN/CGA (B149.1 - latest edition), expressly prohibits the following:

a. Installation of a water heater in a bathroom, bedroom, or any occupied room normally kept closed.
b. Installation of a water heater in a garage, unless the unit is installed so that the burner and ignition devices are at least 18 in (*45.8 cm*) above floor level and protected to avoid damage by a moving vehicle.

If the building’s cold-water supply has a back-flow preventer, check valve, or water meter with check valve, provisions for thermal expansion of water in the hot water system must be provided.

Note: Per Section 507.2 Seismic Provisions of the 2021 Uniform Plumbing Code (UPC). Water heaters shall be anchored or strapped to resist horizontal displacement due to earthquake motion. Strapping shall be at points within the upper one-third and lower one-third of its vertical dimensions. At the lower point, a distance of not less than 4 inches shall be maintained from the controls with the strapping.

Please refer to the local authority having jurisdiction to see if there are any additional local requirements regarding seismic provisions.

THIS WATER HEATER *MUST* BE INSTALLED INDOORS OUT OF THE WIND AND WEATHER.
THIS WATER HEATER *MUST NOT* BE INSTALLED IN ANY LOCATION WHERE GASOLINE OR FLAMMABLE VAPORS ARE LIKELY TO BE PRESENT, UNLESS THE INSTALLATION IS SUCH TO ELIMINATE THE PROBABLE IGNITION OF GASOLINE OR FLAMMABLE VAPORS.

The location of this water heater is of the utmost importance. Before installing this water heater, you should read the Installation section of these instructions. After reading these Installation and Operation Instructions, select a location for the water heater where the floor is level and is easily accessible to water lines, gas supply (type identified on the rating plate), an adequate open drain, and a chimney or exhaust gas vent. **DO NOT locate the water heater where water lines could be subjected to freezing temperatures**. **Make sure the cold-water pipes are NOT located directly above the gas control box or any other electrical control so that condensate during humid weather does not drip on the controls**.

This installation **must** allow access to the front of the water heater and adequate clearance **must** be provided for servicing and operating this water heater. The water heater may be installed on either a combustible or non-combustible floor. If the water heater is to be installed directly on carpeting, it **must** be installed on top of a metal or wood panel (or equivalent) extending beyond the full width and depth of the appliance by at least 3 in *(7.6 cm)* in any direction or, if the appliance is to be installed in an alcove or closet, the entire floor **must** be covered by the panel. The minimum clearances to combustibles for this water heater are given in the following pages. A minimum of 24 in *(61 cm)* front clearance **must** be provided for inspection and servicing. Adequate clearances **must** be provided for easy access to controls by service personnel to enable proper cleaning, servicing, and operation of the water heater.

Water heater corrosion and component failure can be caused by the heating and breakdown of airborne chemical vapors. Examples of some typical compounds that are potentially corrosive are: spray can propellants, cleaning solvents, refrigerator and air conditioning refrigerants, swimming pool chemicals, calcium and sodium chloride, waxes, and process chemicals. These materials are corrosive at very low concentration levels with little or no odor to reveal their presence.

NOTICE

DAMAGE TO THE WATER HEATER CAUSED BY EXPOSURE TO CORROSIVE VAPORS IS **NOT** COVERED BY THE WARRANTY. **DO NOT** OPERATE THE WATER HEATER IF EXPOSURE HAS OR WILL OCCUR. **DO NOT** STORE ANY POTENTIALLY CORROSIVE COMPOUNDS IN THE VICINITY OF THE WATER HEATER.

Unpacking

1. Inspect carefully for any signs of damage.
2. Any claims for damage or shortage in shipment must be filed immediately with the manufacturer noted on the rating plate label.

Locating the Water Heater

1. Locate the water heater in front of final position before removing crate.
2. Locate so that venting connections will be short and direct.
3. This water heater is suitable for installation on combustible floor. **DO NOT** install this water heater directly on carpeting. If the water heater is to be installed on carpeting, it must be installed on top of a metal or wood panel extending beyond the full width and depth of the appliance by at least three 3 in *(7.6 cm)* in any direction or, if the appliance is to be installed in an alcove or closet, the entire floor must be covered by the panel.
4. For basement installation, provide a solid, level, and elevated base such as concrete or other suitable pad to raise the water heater at least 3 in *(7.6 cm)* to provide a slope of 1/4 in/ft *(.635 cm/m)* for the condensate line to a suitable drain.
5. Proper venting practices must be considered when selecting a location for this water heater. For exact venting specifications, please consult the Venting section of these Installation and Operation Instructions (page 13).
6. It is recommended that minimum clearances shown in Figure 2b be provided on the sides and top of the water heater for servicing and maintenance of the water heater. Increase distances to provide clearance for servicing.

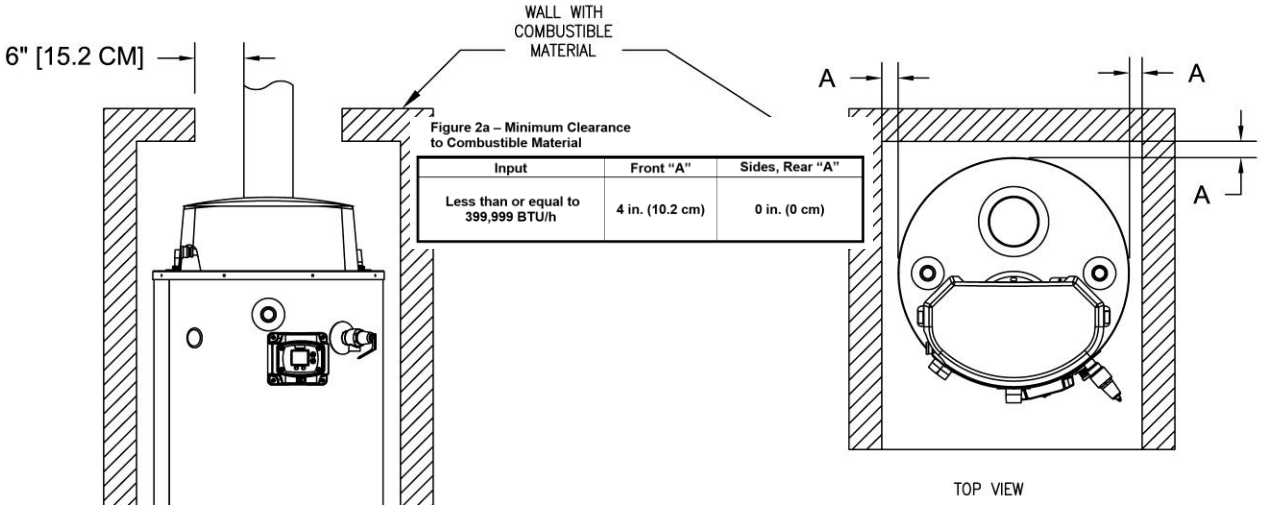

Figure 2a – Minimum Clearance to Combustible Material

Input	Front "A"	Sides, Rear "A"
Less than or equal to 399,999 BTU/h	4 in. (10.2 cm)	0 in. (0 cm)

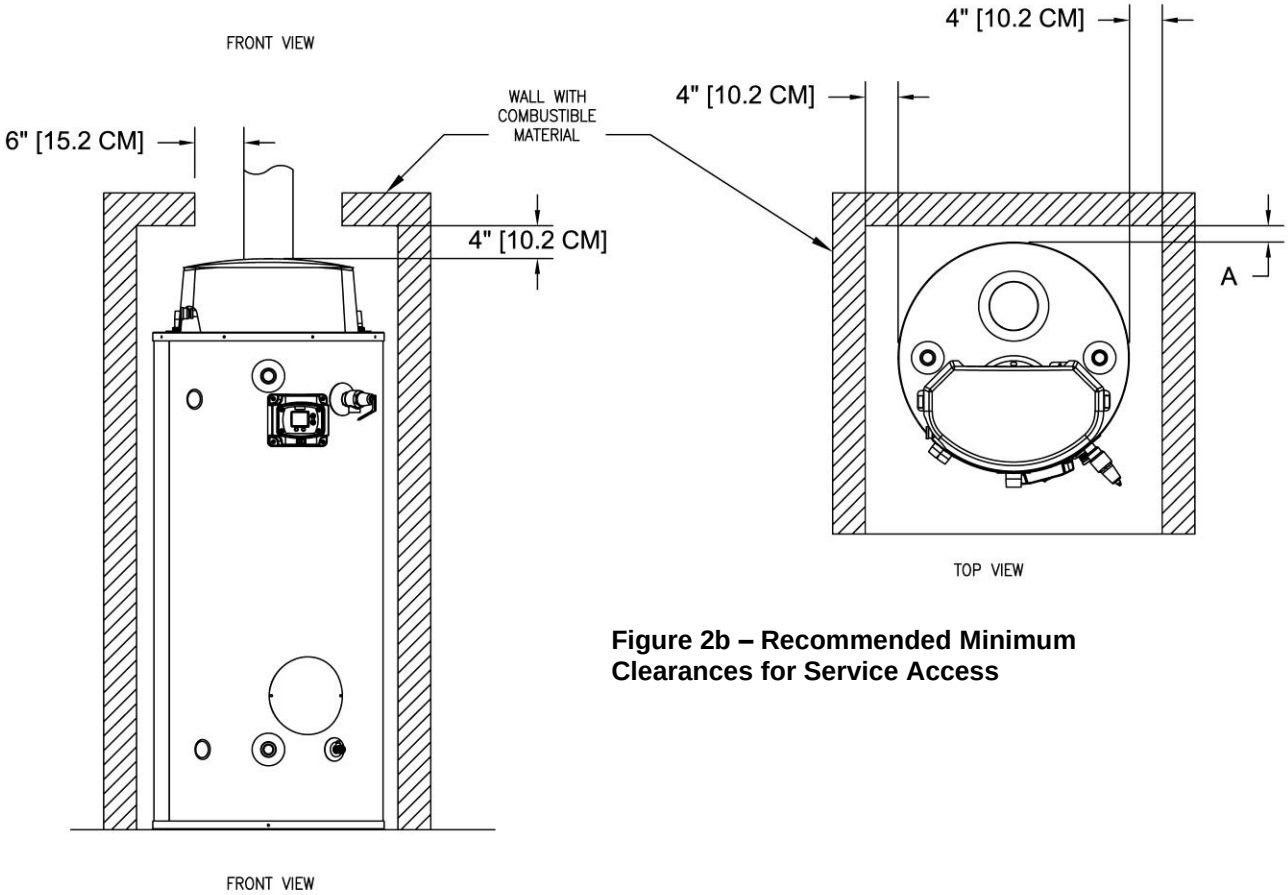

Figure 2b – Recommended Minimum Clearances for Service Access

Remove Crate

1. Remove all banding and pry off crate sides carefully so as to not damage the water heater.
2. Carefully roll/lift the water heater from the crate base.

⚠ CAUTION

DO NOT drop water heater. **DO NOT** bump water heater jacket against floor.

DO NOT bump exhaust vent pipe against crate or other objects. This will damage the heater and cause it to be inoperable or create nuisance problems.

Moving the Water Heater to a Permanent Position

1. Move the water heater to a permanent position by sliding or walking.
2. Place drain pan underneath the water heater.

Install Temperature and Pressure Relief Valve (if not already installed)

⚠ DANGER

Temperature setting should **NOT** exceed safe temperature at fixtures. See water temperature control warning in Section VI: Water Connections (page 21). If higher preheat temperatures are necessary to obtain adequate booster output, add an ASSE approved mixing device for hot water supplied to fixtures.

⚠ WARNING

Temperature and pressure relief valve discharge piping must be piped near floor to eliminate potential of severe burns. **DO NOT** pipe in any area where freezing could occur. **DO NOT** install any shut-off valves, plugs or caps to the temperature and pressure relief valve or piping.

Location

⚠ WARNING

KEEP APPLIANCE AREA CLEAR AND FREE OF COMBUSTIBLE MATERIALS, GASOLINE, AND OTHER FLAMMABLE VAPORS AND LIQUIDS.

This water heater must be located in an area where the general public does NOT have access to set temperatures.

Air Requirements

1. Do **NOT** obstruct the flow of ventilating air.
2. For safe operation, adequate air is needed for combustion and ventilation. Sooting may result in serious damage to the water heater and risk of fire or explosion. It can also create a risk of asphyxiation. Such a condition often will result in a yellow, luminous burner flame, causing carboning or sooting of the combustion chamber, burner and flue tubes.

Mechanical Exhausting of Room Air

Where an exhaust fan is installed in the same room with this water heater and combustion air is drawn from inside the room, sufficient openings for air **must** be provided in the walls.

⚠ WARNING

Undersized openings will cause air to be drawn into the room through the water heater's venting system, causing poor combustion that may be hazardous to life. **Sooting may result in serious damage to the water heater and risk of fire or explosion, which can also create a risk of asphyxiation.** Refer to local codes and /or National Fuel Gas Code (ANSI Z223.1-Latest Edition), or in Canada CAN/CGA B149.1 Natural Gas Installation Code (Latest Edition) or CAN/CGA B149.2 Propane Installation Code (Latest Edition) for proper air opening sizing.

⚠ WARNING

The flue collar relief opening of the water heater and combustion air inlet must be in the same atmospheric pressure zone. Large exhaust fans in kitchens and other locations can lower the air pressure inside an enclosure and interfere with the proper operation and venting of the water heater. In these cases, the water heater should be installed in a separate room with the combustion and ventilation air supplied directly from outdoors as previously described.

Unconfined Space

1. In buildings of conventional frame, brick, or stone construction, unconfined spaces may provide adequate air for combustion and ventilation.
2. If the unconfined space is within a building of tight construction (buildings using the following construction: weather stripping, heavy insulation, caulking, vapor barrier, etc.), air for combustion and ventilation **must** be obtained from outdoors. This may be accomplished by piping air directly to the water heater from outside or providing opening or ducts in the wall. The installation instructions for confined spaces in tightly constructed buildings **must** be followed to ensure adequate air supply.

Confined Space (Spaces having less than 50 ft^3/1000 BTU/hr *(4.8 m^3/kW)*)

1. When drawing combustion air from inside a conventionally constructed building to a confined space, such a space shall be provided with two permanent openings.
   - The top opening is to be located within 12 in *(30 cm)* of the enclosure top and the bottom opening within 12 in *(30 cm)* of the enclosure bottom.
   - Each opening shall have a free area of at least 1 in^2/1000 BTU/hr *(2200 mm^2/kW)* of the total input of all appliances in the enclosure, but not less than 100 in^2.
2. If the confined space is within a building of tight construction, air for combustion and ventilation must be obtained from outdoors. This may be accomplished by piping air directly to the water heater from outside or providing opening or ducts in the wall. When directly communicating with the outdoors through vertical ducts, two permanent openings, located in the above manner, shall be provided.
   - Each opening shall have a free area of not less than 1 in^2/4000 BTU/hr *(550 mm^2/kW)* of the total input of all appliances in the enclosure.
   - If horizontal ducts are used, each opening shall have a free area of not less than 1 in^2/2000 BTU/hr *(1100 mm^2/kW)* of the total input of all appliances in the enclosure.
3. If the water heater is installed as a direct vent (outside air piped directly to the water heater), then additional openings, other than the opening for the air intake, are not required. However, adequate ventilation air must be provided in all cases to prevent increased room temperature.

All Air From Inside The Building

The confined space must be provided with two permanent openings communicating directly with an additional room(s) of sufficient volume so that the combined volume of all spaces meets the criteria for an unconfined space. The total input of all gas utilization equipment installed in the combined space must be considered in making this determination. Each opening must have a minimum free area of 1 in.^{2}/1000 BTU (*2.54cm^2/0.29kW*) per hour of the total input rating of all gas utilization equipment in the confined space, but not less than 100 square inches (*254cm^2*). One opening must be within 12 in (*30 cm*) of the top and one within 12 in (*30 cm*) of the bottom of the enclosure.

Specially Engineered Installations

The requirements noted under Confined Spaces above must not necessarily govern when special engineering, approved by the authority having jurisdiction, provides an adequate supply of air for combustion, ventilation, and dilution of flue gases.

Chemical Vapor Corrosion

Corrosion of the flue ways and vent system will occur if air for combustion contains certain chemical vapors. Such corrosion may result in poor combustion and create a risk of asphyxiation, as well as reducing the life of the water heater. Spray can propellants, cleaning solvents, refrigerator and air conditioning refrigerants, swimming pool chemicals, calcium and sodium chloride, waxes and process chemicals are corrosive. Products of this sort should **NOT** be stored near the water heater or outside by the air intake (if applicable).

SECTION V: VENTING

⚠ WARNING

The venting system must be installed properly following all local codes or in the absence of local codes, the latest edition of the National Fuel Gas Code (ANSI Z223.1- latest edition), or in Canada, The Natural Gas Installation Code (B149.1-00 latest edition) or CAN/CGA B149.2 Propane Installation Code (Latest Edition).
Failure to properly install the venting system could result in property damage, personal injury, or death.

Carefully inspect the venting system of a replacement water heater installation before connecting to the venting system. All joints in the vent connector **must** be securely fastened with screws and fit tightly together. Inspect the venting system for signs of deterioration (rust and perforation) and replace any sections that are not in good condition.
The chimney **must** be lined and in good condition. Check to make sure the venting system is properly sized for the water heater. When an existing Category I appliance is removed or replaced, the original venting system may no longer be sized to properly vent the attached appliances. If the venting system was previously sized for another gas appliance that has been removed, the venting system may now be too large. Refer to the latest edition of the National Fuel Gas Code (ANSI Z223.1-latest edition), or in Canada, the Natural Gas and Propane Installation Code (B149.1-00 latest edition) for the correct sizing of venting systems and common venting with another gas appliance. **DO NOT** vent this water heater into the venting system of another gas appliance designed to vent under positive pressure.

The water heater should be installed as close as practical to the venting system to minimize the vent connector length required. Refer to local codes for the distance limitations on vent connector lengths. At the completion of the water heater installation, the burner and venting system must be checked for proper operation with all other commonly vented appliances in operation. Refer to the latest edition of the National Fuel Gas Code, or in Canada, the Natural Gas and Propane Installation Code for complete details on the "Procedure to Be Followed to Place Equipment in Operation".

This water heater must be connected to a lined masonry chimney or venting system approved by local codes or ordinances. The vent connector used to attach the flue collar outlet to the chimney or approved vent must be of the same diameter as the flue collar outlet or larger. For proper venting in certain installations, a larger vent connector may be needed. Consult venting tables in ANSI standard (Z223.1- latest edition), National Fuel Gas Code and CAN/CGA (B149.1 or B149.2-latest editions) Natural Gas and Propane Installation Code, or local code officials for proper application for your area.

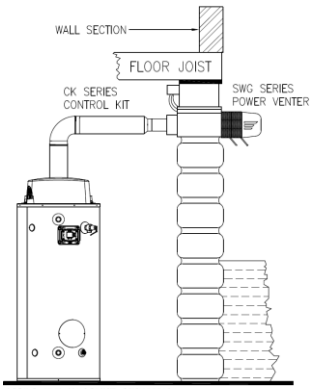

TYPICAL APPLICATIONS

Optional Power Vent Kits – for side wall termination only.

Model Numbers	Kit Number
UCG-80H-125/199/270, UCG-100H-199/270:	239-81764-00
UCG-80H-399, UCG-100H-399:	239-81766-00

Exhaust Horizontal Installation:

In a horizontal application, it is important that condensate not be allowed to buildup in the exhaust vent pipe. To prevent this from happening the pipe should be installed with a slight upward slope so the condensate will run back toward the water heater. The vent system should be supported every 5 feet (1.5 m) of vertical run and every 3 feet (1 m) of horizontal run of vent pipe length. The venting system should have horizontal runs sloping upwards not less than ¼ inch (21 mm/m) from the appliance to the vent terminal.

Optional Intake Venting

⚠ DANGER

The venting instructions **must** be followed to avoid restricted combustion or recirculation of flue gases. Such conditions cause sooting or risks of fire and asphyxiation.

NOTICE

Before beginning installation of any vent pipe, read the vent pipe manufacturer's installation instructions.

DO NOT install the water heater in any location where the ambient temperature may fall below freezing. Water heater must be protected from freezing downdrafts during shutdown periods.

⚠ CAUTION

The vent shall terminate a minimum of 12 in (30 cm) above expected snowfall level to prevent blockage of vent termination.

The horizontal centerline of the exhaust vent terminal (if applicable) **must NOT** be located lower than the horizontal centerline of the air intake terminal if vented through the same wall.

⚠ CAUTION

A service drain loop **must** be installed in the drain tubing to serve as a condensate trap to prevent flue gases from escaping into the room.

NEVER locate the air intake where exhaust gases from other appliances can be introduced into the intake.

⚠ WARNING

The intake vent system **must** be properly installed. Failure to properly install the vent system could result in property damage, personal injury, or death.

Use only the vent terminals provided or factory authorized terminals for venting this water heater.

The water heater requires its own separate intake venting system.

DO NOT terminate the venting where noise from intake venting will be objectionable. This includes locations close to or across from windows and doors. Avoid anchoring the intake vent pipes directly to framed walls, floors, or ceilings unless rubber isolation pipe hangers are used. This prevents any vibrations from being transmitted into the living spaces.

DO NOT exceed the venting distances or the number of elbows listed in this manual. Exceeding the maximum venting distances may cause the water heater to malfunction or cause an unsafe condition.

DO NOT operate this water heater until the venting installation is complete and the piping completed. Failure to complete installation before operation can result in property damage, personal injury, or death.

NOTICE

For installations in Canada, field supplied vent piping must comply with CAN/CGA B149.1 (latest edition) and be certified to the Standard For Type BH, Class II, 65°C, Gas Venting Systems, ULC S636. Components of this listed system shall not be interchanged with other vent systems or unlisted pipe/fittings. All components and specified primers and cements of the certified vent system must be from a single system manufacturer and not intermixed with other system manufacturer's vent system parts. The supplied vent connector and vent termination are certified under ULC S636 and are also certified as part of the water heater. Refer to the following tables for approved venting materials, primers, and cements. All approved primers and cements are to be used within their marked time limitations.

Approved Intake Venting Materials

For installations in the US only

- PVC Sch. 40 (ASTM D-1785, ULC 1738, ULC S636)
- DWV PVC Sch. 40 (ASTM-D2665)
- CPVC Sch. 40 (ASTM-F441, ASTM-D2846, ULC S636)
- Polypropylene (UL 1738, ULC S636)
- ABS Sch. 40 DWV (ASTM D2661)

For installations in CANADA

- ULC S636 approved Sch. 40 PVC and CPVC for flue gas venting rated Class II, 65°C (components provided with water heater)
- ULC S636 approved Polypropylene for flue gas venting rated Class II, 65°C

Approved Primers and Cements

For installations in the US only

- PVC and CPVC Primer (ASTM F-656)
- PVC Cement (ASTM D-2564)
- CPVC Cement (ASTM F493)
- ABS Primer and Cement (ASTM D-2235)

For installations in CANADA

- ULC S636 approved PVC Primer and Cement for flue gas venting rated Class II, 65°C

NOTICE

Use of cellular core PVC (ASTM F891). Cellular core CPVC, or Radel® (polyphenosulfone) in non-metallic venting systems is prohibited and covering non-metallic venting with thermal insulation is prohibited.

⚠ CAUTION

Check to make sure flue gases **DO NOT** recirculate into the air intake terminal when using direct venting. If the water heater is having service issues, flue recirculation may be a contributing factor. Even when the minimum vent terminal separation distances are followed, recirculation may still occur depending upon the location outside the building, the distance from other buildings, proximity to corners, weather conditions, wind patterns, and snow depth. Periodically check to make sure that flue recirculation is **NOT** occurring. Signs of flue gas recirculation include frosted or frozen intake terminals, condensate in the intake terminal and venting system, oxidation or white chalk material on the flame sensor or igniter shield. Correction to flue recirculation may involve relocating the air intake to another side of the building or using inside air for combustion. Check to be sure the intake is **NOT** obstructed, especially during periods of below freezing weather.

High levels of dust and debris such as road and construction dust, insects, and tree pollen may clog the burner resulting in poor performance and damage to the water heater. Avoid air intake locations where debris can be created such as exhaust ventilation hoods, gravel parking lots, and near outdoor spotlights that attract bugs. For these installations, an air intake filter kit is available as an accessory service part from the installer of this water heater. The air intake filter kit is **NOT** designed to filter out airborne contaminants or chemicals that may damage the water heater.

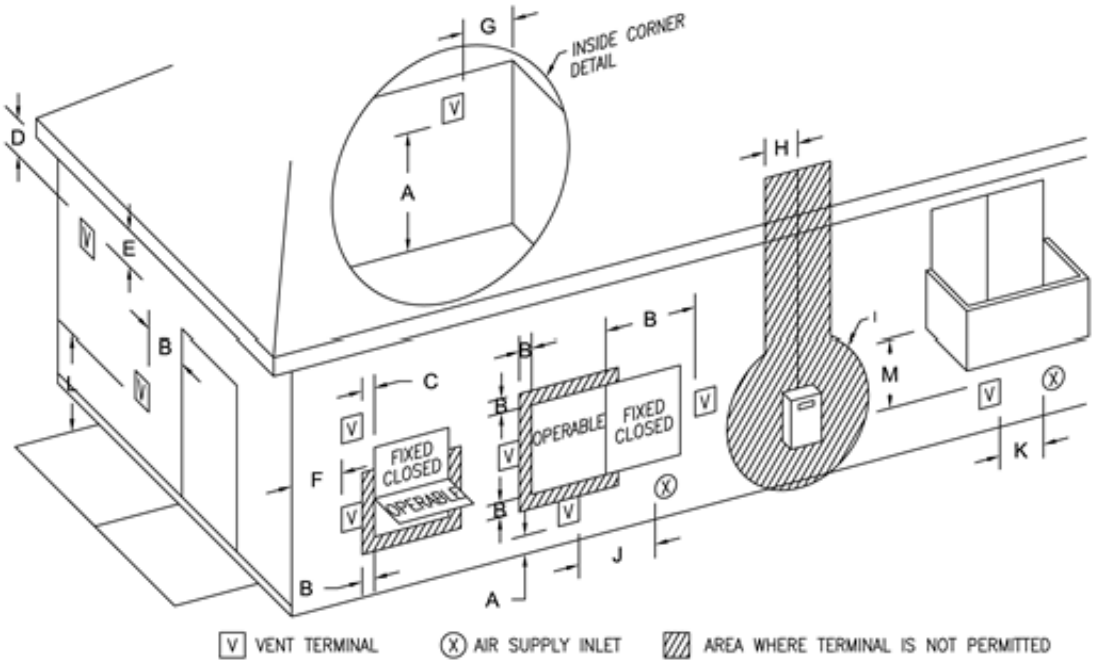

Figure 3 – Intake Vent Terminal Clearances (Referencing Other Appliance Venting Locations)

		Canadian Installations[1]	US Installations[2]			Canadian Installations[1]	US Installations[2]
A=	Clearance above grade, veranda, porch, deck or balcony	12 inches (30 cm)	12 inches (30 cm)	**H=**	Clearance to each side of center line extended above meter/regulator assembly	3 feet (91 cm) within a height 15 feet (4.6 m) above the meter/regulator assembly	*b
B=	Clearance to window or door that may be opened	6 in *(15cm)* for appliances ≤10,000 Btuh *(3kW)*; 12 in *(30 cm)* for appliances >10,000 Btuh *(3kW)* and ≤100,000 Btuh *(30kW)*; 36 in *(91 cm)* for appliances >100,000 Btuh *(30 kW)*	4 feet (1.2 m) below or to the side of opening; 12 inches (30 cm) above opening	**I=**	Clearance to service regulator vent outlet or oil tank vent	36 inches (91 cm)	*b
C=	Clearance to permanently closed window	*b	*b	**J=**	Clearance to non-mechanical air supply inlet to building or the combustion air inlet to any other appliance	6 in *(15cm)* for appliances ≤10,000 Btuh *(3kW)*; 12 in *(30 cm)* for appliances >10,000 Btuh *(3kW)* and ≤100,000 Btuh *(30kW)*; 36 in *(91 cm)* for appliances >100,000 Btuh *(30 kW)*	4 feet (1.2 m) below or to side of opening; 12 inches (30 cm) above opening.
D=	Vertical clearance to ventilated soffit located above the terminal within a horizontal distance of 2 feet (61 cm) from the center line of the terminal	*b	*b	**K=**	Clearance to a mechanical air supply inlet	6 feet (1.83 m)	3 feet (91 cm) above if within 10 feet horizontally
E=	Clearance to unventilated soffit	*b	*b	**L=**	Clearance above paved sidewalk or paved driveway located on public property	7 feet (2.13 m) †	7 feet (2.13 m) †
F=	Clearance to outside corner	*b	*b	**M=**	Clearance under a veranda, porch, deck, or balcony	12 inches (30 cm) ‡	*b
G=	Clearance to inside corner	36 inches (91 cm) *a	36 inches (91 cm) *a				

In accordance with the current CAN/CGA-B149 *Installation Codes*.
[2] In accordance with the current ANSI Z223.1-(Latest Edition)/NFPA 54 *National Fuel Gas Code*.
† A vent shall not terminate directly above a sidewalk or paved driveway that is located between two single-family dwellings and serves both dwellings.
‡ Permitted only if a veranda, porch, deck or balcony is fully open on a minimum of two sides beneath the floor.
*a) A minimum clearance value determined by testing in accordance with section 2.20.
*b) "Clearance in accordance with local installation codes and the requirements of the gas supplier".

Vent pipes serving power vented appliances are classified by building codes as "vent connectors." Required clearances from combustible materials must be provided in accordance with information in this manual under Locating the Water Heater and Clearances, and with National Fuel Gas Code and local codes.

Clearance to combustibles for all venting pipes and terminals	
For installations in the US 0” minimum	**For installations in the CANADA** Refer to vent pipe and terminal manufacturer’s installation instructions for clearances to combustibles
DO NOT place insulation or other materials in the required clearance spaces between the venting to combustible material unless otherwise specified.	

Horizontal Installation

In a horizontal application, it is important that moisture is not to be allowed to buildup in the intake vent pipe. To prevent this from happening, the pipe should be installed with a slight downward slope so the moisture will run back away from the water heater. The vent system must be supported every 5 ft *(1.5 m)* of vertical run and every 3 ft *(.92 m)* of horizontal run of vent pipe length.

⚠ CAUTION

Failure to properly support the vent piping with hangers and clamps may result in damage to the water heater or venting system.

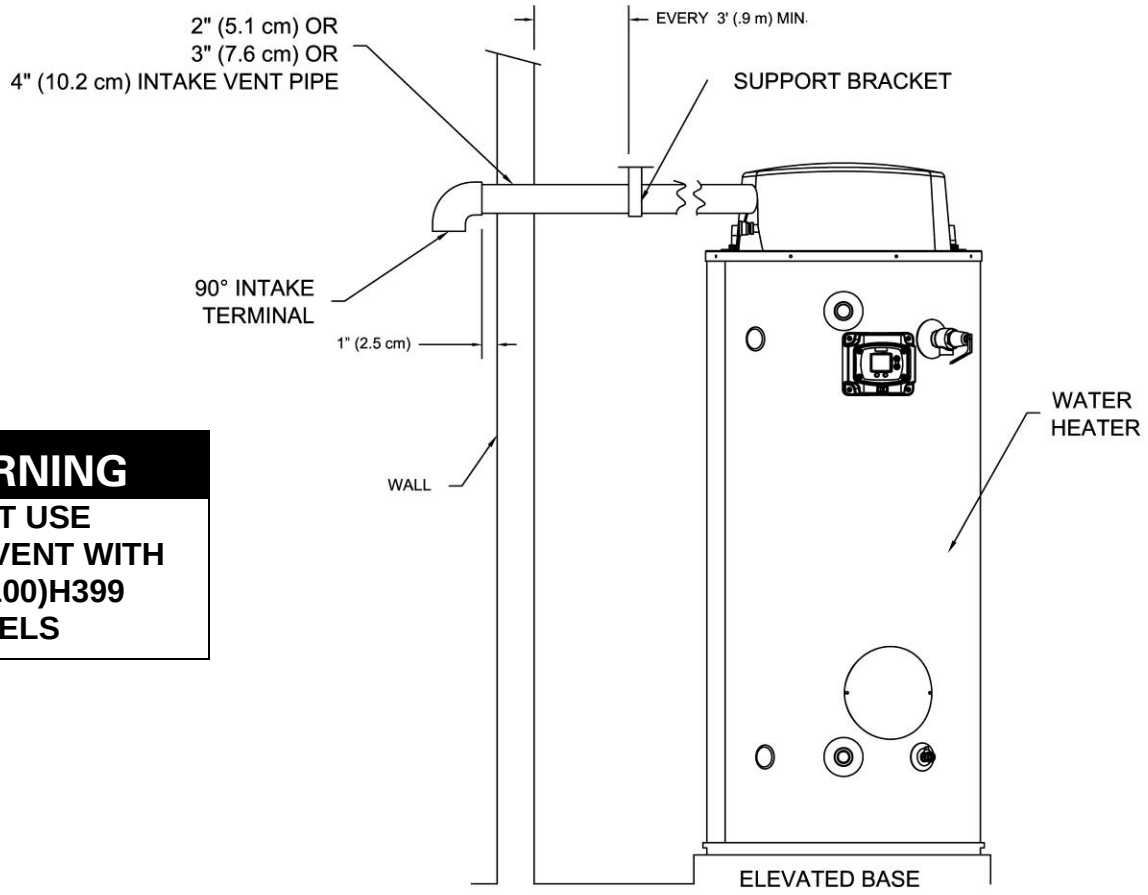

⚠ WARNING

DO NOT USE 2” INTAKE VENT WITH UCG(80,100)H399 MODELS

Figure 4 – Typical Horizontal Intake Vent System

Vertical Installation

Vertical venting system must be supported every 5 ft *(1.5 m)* of vertical run and every 3 ft *(.92 m)* of horizontal run of vent pipe length.

⚠ CAUTION

Failure to properly support the vent piping with hangers and clamps may result in damage to the water heater or venting system.

⚠ WARNING

DO NOT USE
2" INTAKE VENT WITH
UCG(80,100)H399 MODELS

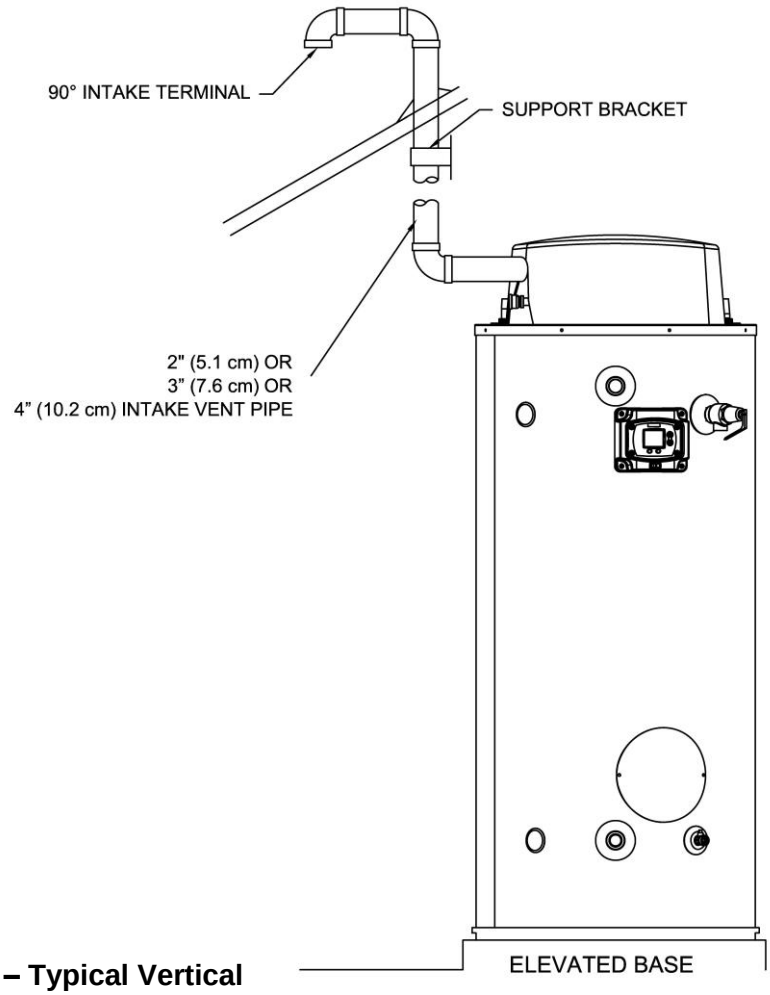

Figure 5 – Typical Vertical Intake Vent System Installation

Through the Wall Venting with Low Ground Clearance

When venting cannot exit through the wall at a height greater than or equal to 12 in *(30.5 cm)* (above expected snowfall level) from the ground, then the installation must be modified as shown below (see Figure 6).

⚠ WARNING

DO NOT USE
2" INTAKE VENT WITH
UCG(80,100)H399 MODELS

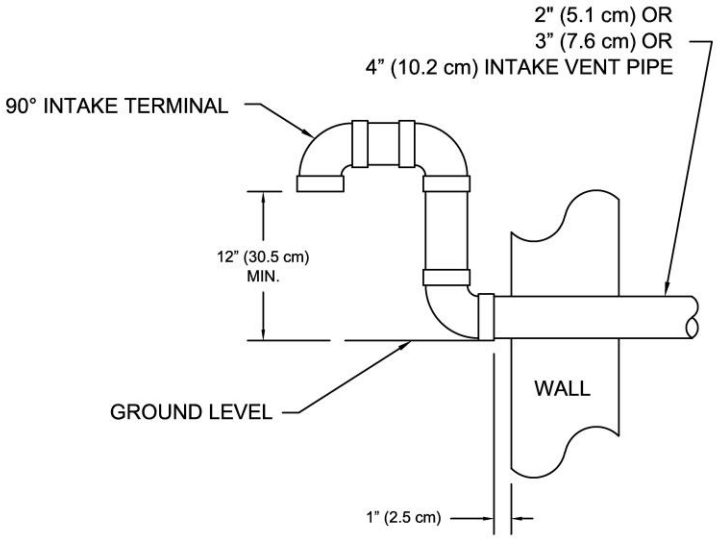

Figure 6 – Vent Terminal (Low Ground Clearance)

Maximum Vent Length

Table 2 – Maximum Intake Vent Length

Model Number	Max 2” Vent Length (feet)	Max 3" Vent Length (feet)	Max 4" Vent Length (feet)
UCG100H199	20	50	75
UCG100H270	20	50	75
UCG100H399	N/A	25	50
UCG80H125	20	50	75
UCG80H199	20	50	75
UCG80H270	20	50	75
UCG80H399	N/A	25	50

Determining Required Vent Length

1. Determine the total length of straight vent pipe (in feet) required for the intake.
2. Add 5 ft *(1.52 m)* of venting for every 90° elbow.
3. Add 2 ½ ft *(.76 m)* of venting for every 45° elbow.
4. **Total vent length cannot exceed “Max Vent Length” on the venting table shown above.**

Example of Total Vent Length for UCG100H199 Installation

A 3 in *(7.6 cm)* venting system has a total of three 90° elbows and a total straight pipe length of 30 ft *(9.2 m)*.

Equivalent vent length for elbows: 3 x 5 feet = 15 feet *(4.5 m)*.

Total equivalent vent distance = 30 feet + 15 feet = 45 feet *(13.7 m)* total equivalent vent length. This is below the maximum allowed distance of 50 feet *(15.2 m)* for this model using 3 in vent.

Vent Pipe Preparation

⚠ WARNING

DO NOT attempt to start this water heater until vent pipe solvent fumes completely clear from the room and inside the vent piping.

Vent Pipe Preparation and Joining

Most failures in vent systems result from improper preparation and joining of pipe and fittings. The guidelines below must be followed when installing the venting system. If you have any questions about the application or installation of the venting system, contact the vent pipe manufacturer, supplier, or your plumbing professional.

1) Specific cleaners, solvents, primers, and cements are available for PVC, CPVC, and ABS pipe. Be sure these materials match the type of pipe to be installed. The vent pipe manufacturers joining instructions must be followed in all cases. Never use all-purpose cements, commercial glues and adhesives or ABS cement to join PVC or CPVC pipe and fittings. Refer to the table at the beginning of the Venting section for approved primers and cements.
   a) **CLEANERS, SOLVENTS, PRIMERS AND CEMENTS ARE FLAMMABLE. Do NOT store or use these materials near heat or open flame, or in the vicinity of other appliances.**
2) Use proper cutting, deburring, and applicator tools to ensure proper preparation and joining of pipe and fittings.
   a) Cutting Tools
      i) A square cut must be achieved with a miter box saw or pipe cutter to ensure a proper mating with the female. If a pipe cutter is used, the burr created at the outer edge of the pipe must be removed.
   b) Deburring Tools
      i) A file, knife, or plastic deburring tool can be used to remove burrs. Burrs must be removed from the inside and outside edges of the pipe to ensure a proper seal.
   c) Applicator Tools
      i) A natural bristle paintbrush or roller may be used to apply cement. Prompt application of the cement is important due its fast-drying properties.
3) Inspection, Cleaning, Priming and Cementing
   a) Inspect the pipe inside and out for dirt, dust, moisture, grease, etc. Check pipe and fittings for splits or cracks and replace if found.
   b) Clean pipe and fittings are imperative for proper joining. Following cutting and deburring, wipe away any foreign material with a clean dry rag. If wiping fails to thoroughly clean surfaces, chemical cleaning is necessary.
   c) Primer must be applied to the pipe surface and fitting socket with a natural bristle brush. This serves to soften and prepare the pipe for cementing.
   d) Cementing must be done quickly to avoid over-drying before joining.
      i) Apply one coat to the outside end of the pipe at a width slightly greater than the depth of the socket.
      ii) Apply a coat around the inside of the fitting socket.
      iii) Apply a second coat around the end of the pipe.
4) Joining
   a) Joints should be made immediately after cement is applied.
   b) After fully inserting pipe into fitting socket, hold joint together for about 15 to 20 seconds.
   c) Remove excess cement from around pipe and fitting with a clean rag.
   d) Cement drying times may vary. Be sure to allow for the recommended drying time before disturbing joints.

For more specific and detailed information about the above, contact the vent pipe manufacturer, supplier, or a certified professional.

SECTION VI: WATER CONNECTIONS

NOTE: ***BEFORE PROCEEDING WITH THE INSTALLATION, CLOSE THE MAIN WATER SUPPLY VALVE.***

⚠CAUTION

If sweat fittings are to be used, **DO NOT** apply heat to the nipples on the side of the water heater. Sweat the tubing to the adapter before fitting the adapter to the water heater connections. It is imperative that heat is **NOT** applied to the nipples containing a plastic liner.

⚠WARNING

Failure to install and maintain a new, listed temperature and pressure relief valve will release the manufacturer from any claim which might result from excessive temperature and pressures.

Keep clear of combination temperature and pressure relief valve discharge line outlet. The discharge may be hot enough to cause scald injury. The water is under pressure and may splash.

Instructions for Connections

1. Before proceeding with the installation, CLOSE the main water supply valve. After shutting OFF the main water supply, open a faucet to relieve the water line pressure to prevent any water from leaking out of the pipes while making the water connections to the water heater. The COLD-water inlet and HOT water outlet are identified on the water heater. Make the proper plumbing connections between the water heater and the plumbing system to the house. Install a shut-off valve in the cold-water supply line.
2. If this water heater is installed in a closed water supply system, such as the one having a back-flow preventer in the cold-water supply, provisions must be made to control thermal expansion. Do **NOT** operate this water heater in a closed system without provisions for controlling thermal expansion. Warranties do **NOT** cover damages from thermal expansion, such as pressure bulges and/or deformities. Your water supplier or local plumbing inspector should be contacted on how to control this situation.
3. After installation of the water lines, OPEN the main water supply valve and fill the water heater. While the water heater is filling, open several hot water faucets to allow air to escape from the water system. When a steady stream of water flows through the faucets, close them and check all water connections for possible leaks.
4. **NEVER operate the water heater without first being certain it is filled with water.**

Scalding

This water heater can deliver scalding temperature water at any faucet in the system. Be careful whenever using hot water to avoid scalding injury. Certain appliances such as dishwashers and automatic clothes washers may require increased temperature water. By setting the thermostat on this water heater to obtain the increased temperature water required by these appliances, you may create the potential for scald injury. To protect against injury, you should install an ASSE approved mixing valve in the water system. This valve will reduce point of discharge temperature by mixing cold and hot water in branch supply lines. Such valves are available from the manufacturer of this water heater or a local plumbing supplier. Please consult with a plumbing professional for installation of mixing valves.

Table 5 – Approximate Time/Temperature Scald Chart

APPROXIMATE TIME/TEMPERATURE RELATIONSHIPS IN SCALDS	
120°F *(49°C)*	More than 5 minutes
125°F *(52°C)*	1½ to 2 minutes
130°F *(54°C)*	About 30 seconds
135°F *(57°C)*	About 10 seconds
140°F *(60°C)*	Less than 5 seconds
145°F *(63°C)*	Less than 3 seconds
150°F *(66°C)*	About 1½ seconds
155°F *(68°C)*	About 1 second

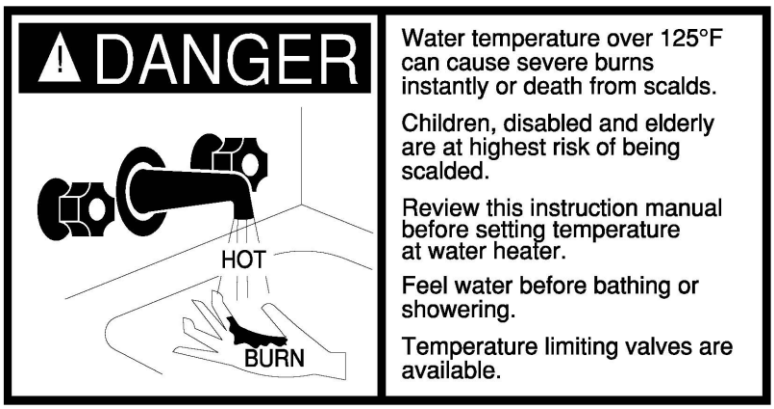

Alternate Space Heating Water Connections

⚠ DANGER
Toxic chemicals, such as those used for boiler treatment, **must NOT** be introduced into potable water used for space heating.
This water heater **must NOT** be connected to an existing heating system or component(s) previously used with a non-potable water heating appliance.
All piping components connected to this water heater for space heating applications **must** be suitable for use with potable water.

⚠ WARNING
When the system requires water for space heating at temperatures higher than required for other means, an ASSE approved mixing valve must be installed to temper the water for those uses in order to reduce the scald hazard potential.
Failure to properly pipe this water heater may result in improper operation and damage to the water heater or structure.
Oxygen contamination of this water heater will cause corrosion of iron and steel components and can lead to water heater failure.

Connect the system supply and return piping to the water heater.

Refer to Figure 13 and Figure 14 for installation examples. Maintain a minimum 1/2” clearance from hot water piping to combustible materials.

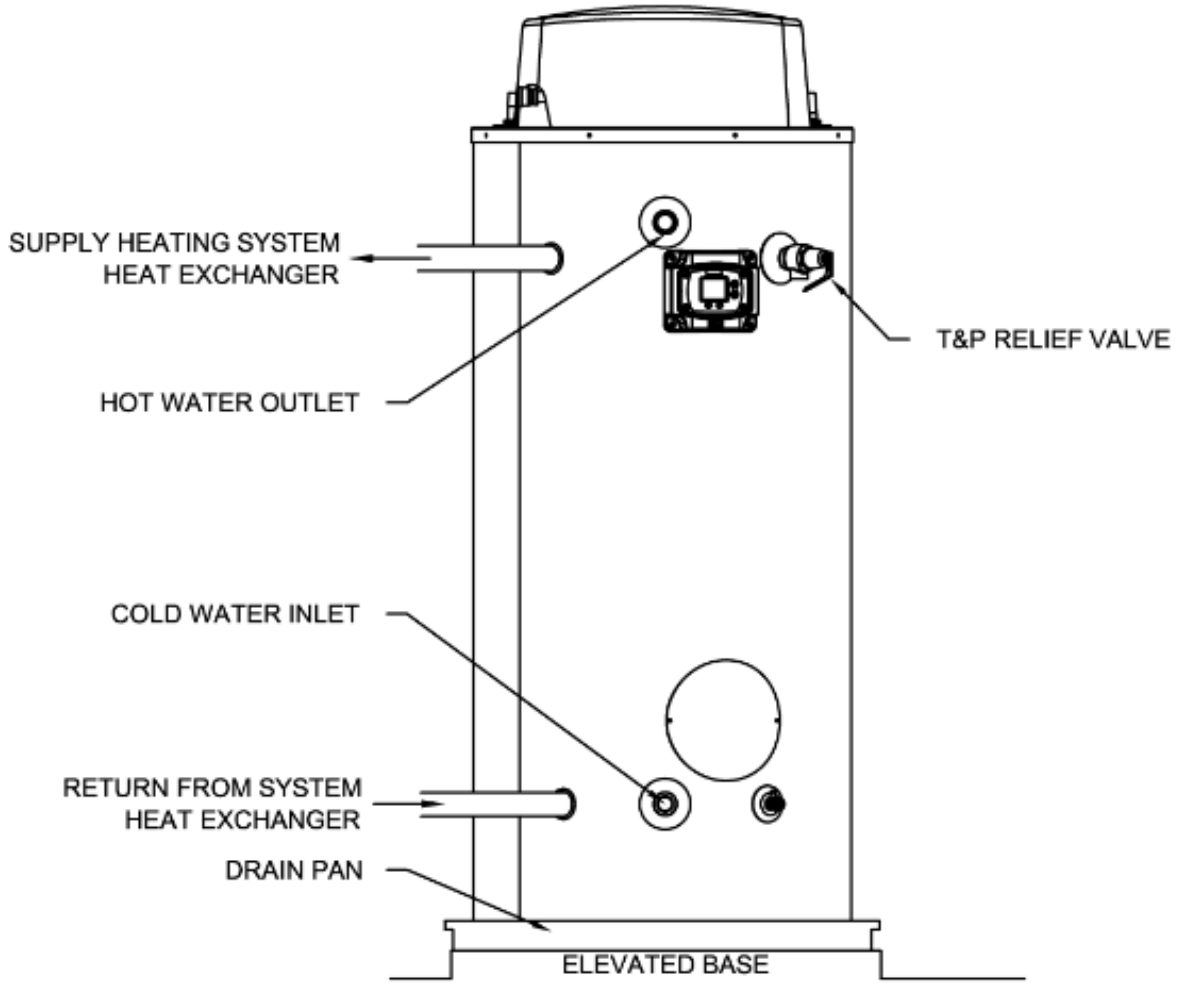

Figure 13 – Alternate Space Heating Connections

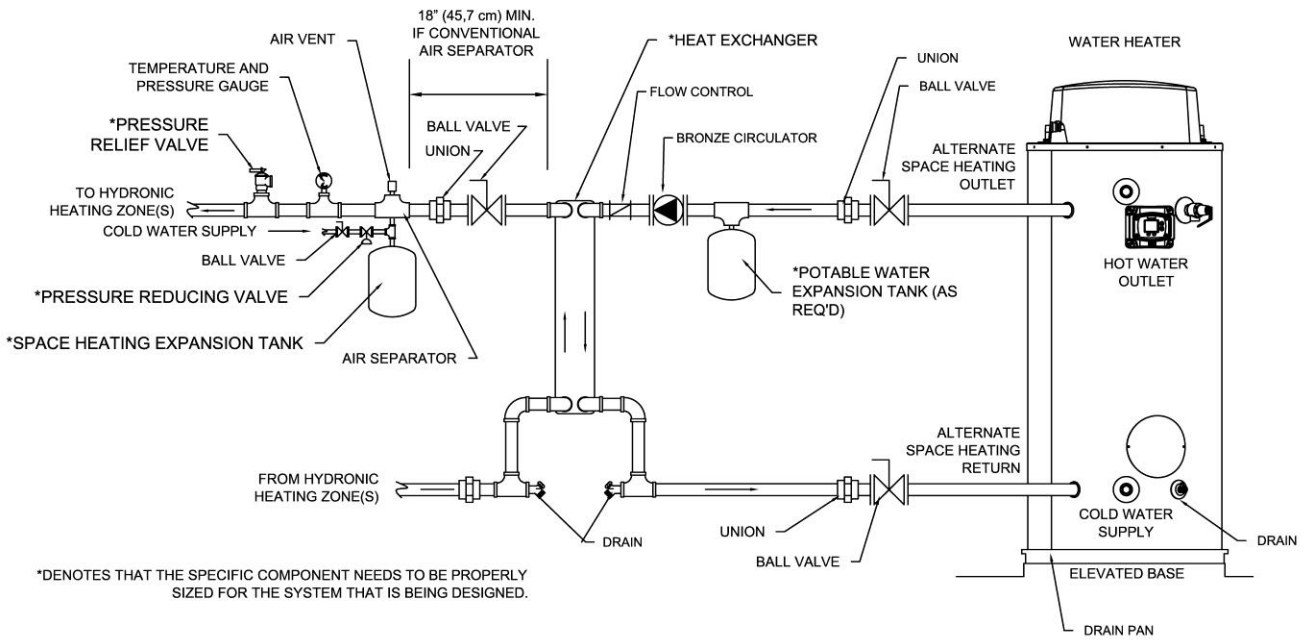

Figure 14 – Typical Plumbing Schematic for Zoned Heating

SECTION VII: GAS CONNECTIONS

The gas supply lines must meet all requirements of the National Fuel Gas Code (ANSI Z223.1-Latest Edition), or in Canada CAN/CGA B149.1 Natural Gas Installation Code (Latest Edition) or CAN/CGA B 149.2 Propane Installation Code (Latest Edition).

The maximum permissible gas supply pressure is 14 in *(3.5 kPa)* W.C. for natural and propane gas.

1. Connect this water heater only to the type of gas as shown on the rating plate. Use clean black iron pipe or equivalent material approved by local codes and ordinances (dirt and scale from the pipe can enter the gas valve and cause it to malfunction). The inlet gas line must have a minimum length of 3 in *(7.6 cm)* drip leg (sediment trap) installed as close to the water heater's gas valve as possible. A ground joint union must be installed as close to the water heater as possible in the gas supply line feeding the water heater to permit servicing of the water heater. Compounds used on the threaded joints of the gas piping must be resistant to the action of liquefied petroleum gases/propane gas. **DO NOT** apply pipe dope to the gas valve inlet and make certain that no pipe dope has become lodged in the inlet screen of the gas valve. Extreme care must be taken to ensure no pipe dope enters the gas valve. Avoid excessive torque when tightening the gas supply line to the gas valve. Excessive torque may result in cracking of the gas valve housing and could create a gas leak. The suggested maximum torque is 31.5 ft. lbs. *(4.4 kg-m*).

NOTICE

The manufacturer of this water heater will **NOT** be liable for any damage or injury caused as a result of a cracked gas inlet as a result of excessive torque.

2. This water heater and its gas connection must be leak tested before placing the water heater in operation. Check for gas leaks with a soap and water solution and a brush or a commercial leak detector fluid.

⚠WARNING

NEVER USE A MATCH OR OPEN FLAME FOR TESTING.

3. While checking for leaks care must be taken to prevent solution from contacting the electrical connections at the control. If electrical connections at the control become wet, they must be thoroughly dried before attempting to operate the water heater.

Gas Meter Size – Natural Gases Only

Be sure that the gas meter has sufficient capacity to supply the full rated gas input of the water heater as well as the requirements of all other gas fired equipment supplied by the meter. If the gas meter is too small, ask the gas company to install a larger meter having adequate capacity.
If copper supply lines are used, they must be internally tinned and certified for gas service.

Gas Pressure Regulation

Main line gas pressure to the water heater should be between a maximum 14 in *(3.5 kPa)* W.C. and a minimum supply pressure as shown on the rating plate. The inlet gas pressure must not exceed the maximum value. In some installations, a regulator sized for the input rating of the water heater will need to be installed just ahead of the inlet gas connection to the water heater to reduce excess gas pressure or surges in gas pressure. **BEFORE PLACING THE WATER HEATER IN OPERATION, CHECK FOR GAS LEAKAGE. USE SOAP AND WATER SOLUTION OR OTHER MATERIAL ACCEPTABLE FOR THE PURPOSE OF LOCATING GAS LEAKS.**

⚠ WARNING

DO NOT use matches, candles, flame or other sources of ignition for this purpose.

⚠ WARNING

The water heater is **NOT** intended for operation at higher than 14 inch water column (½ psi) supply gas pressure. Higher gas supply pressures require supplemental reducing service regulation. Exposure to higher gas supply pressure may cause damage to the gas controls, which could result in fire or explosion. If overpressure has occurred, such as through improper testing of gas lines or emergency malfunction of the supply system, the gas valve must be checked for safe operation. Make sure that the outside vents on the supply regulators and the safety vent valves are protected against blockage. These are parts of the gas supply system, **NOT** the water heater.

⚠ WARNING

Water heaters are heat-producing appliances. To avoid damage or injury there must be no materials stored against the water heater or direct vent system, and proper care must be taken to avoid unnecessary contact (especially by children) with the water heater and direct vent system. **UNDER NO CIRCUMSTANCES SHOULD FLAMMABLE MATERIALS, SUCH AS GASOLINE OR PAINT THINNER BE USED OR STORED IN THE VICINITY OF THIS WATER HEATER OR IN ANY LOCATION FROM WHICH FUMES COULD REACH THE WATER HEATER.**

Installation or service of this water heater requires ability equivalent to that of a licensed tradesman in the field involved. Plumbing, air supply, venting, gas supply and electrical work are required.

Light the unit in accordance with the operating instructions label attached to the water heater.

Under **NO** circumstances should the input rate exceed the input rate shown on the water heater rating plate. Over firing could result in damage or sooting of the water heater.

If the unit is exposed to the following, **DO NOT** operate water heater until all corrective steps have been made by a factory authorized independent service contractor or qualified service professional.

1. Flooding to or above the level of the burner or controls
2. External firing
3. External firing
4. Damage
5. Firing without water
6. Sooting

NEVER OPERATE THE WATER HEATER WITHOUT FIRST BEING CERTAIN IT IS FILLED WITH WATER AND A TEMPERATURE AND PRESSURE RELIEF VALVE IS INSTALLED IN THE RELIEF VALVE OPENING OF THE WATER HEATER.

⚠ WARNING

DO NOT run out of propane gas. Damage to the water heater may occur.

SECTION VIII: ELECTRICAL CONNECTIONS

⚠ WARNING

Turn OFF or disconnect the electrical power supply to the water heater before servicing. Label all wires prior to disconnection when servicing controls. Wiring errors can cause improper and dangerous operation. Verify proper operation after servicing.

All electrical wiring must be installed and grounded in accordance with local codes, or in the absence of local codes, the National Electrical Code, ANSI/NFPA 70 and/or CSA C22.2 Electrical Code.

The water heater **must be** wired to a 120 VAC, 60 Hz, 15A power supply. The water heater **must be** wired on a separate circuit and breaker. If a flexible line cord and plug is permitted by local code, then provide a three wire grounding type receptacle within reach of the line cord provided on the control box. **Do NOT** plug the line cord into a receptacle that can have the power supply interrupted by a switch that is used to control lights or another appliance.

If wiring in conduit is required, cut the line cord close to the control board and make the appropriate wiring connections. Install an electrical conduit connector on the outside jacket of the water heater. Refer to the wiring diagram for the correct connections to each wire lead.

⚠ CAUTION

This water heater **must** be wired on a separate circuit. Failure to wire on a separate circuit may cause improper operation or failure of the electrical components of the water heater.

DO NOT energize the electric circuit before the water heater tank is filled with water.

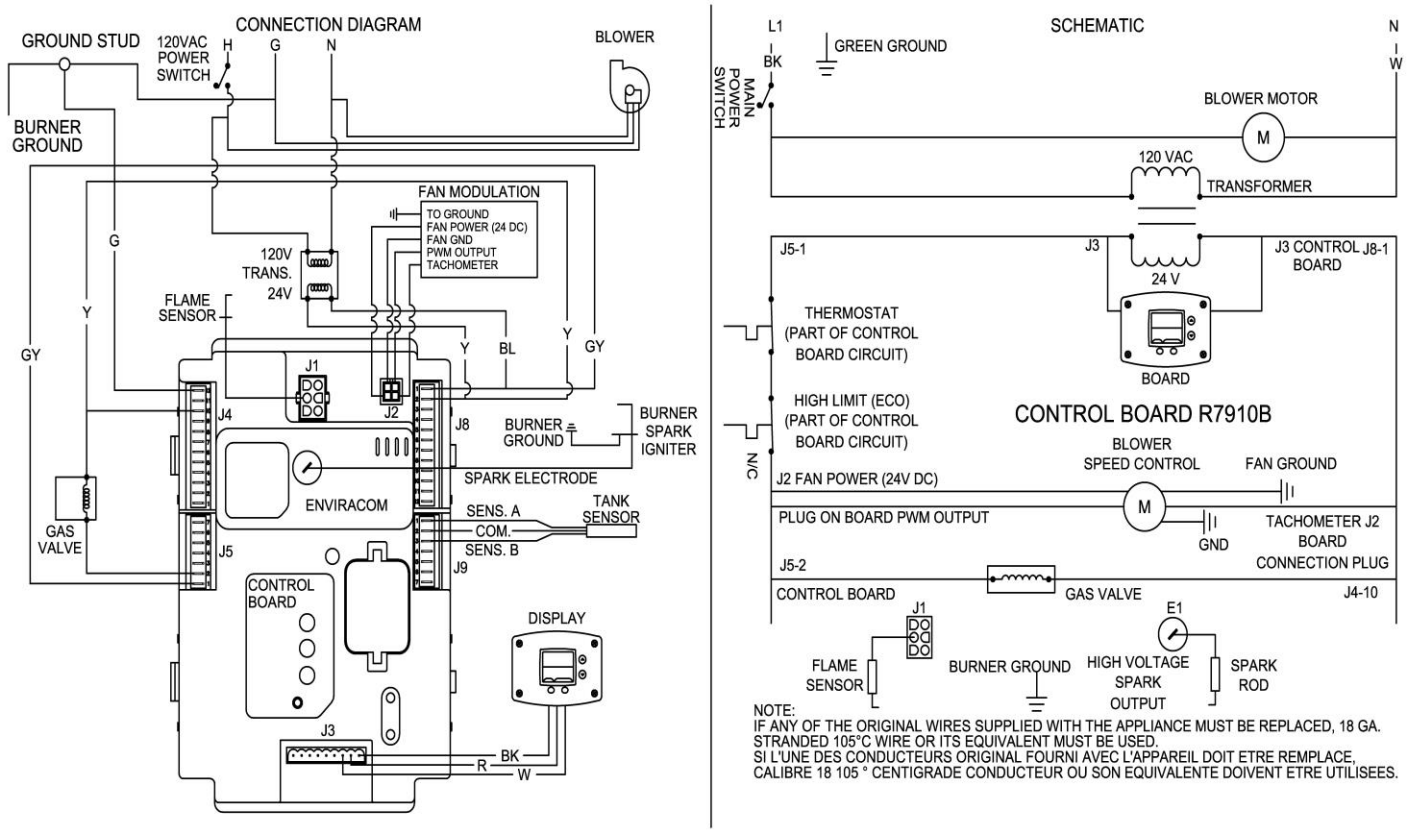

Figure 15 – Wiring Diagram and Schematic

Building Management System (BMS)

The water heater can be equipped with a gateway kit that will facilitate a Building Management System (BMS) connection to Modbus or Bacnet®. This kit is sold separately and is not factory installed. A full installation, operation, and troubleshooting manual is provided with the gateway kit.

⚠ CAUTION

Before beginning any Troubleshooting operations listed below, please note that the gateway kit and BMS may need to be disconnected from the heater. Please ensure this has been completed before proceeding with any troubleshooting operation that may be impacted by settings in the BMS.

BMS Mapping

Map Descriptor Name	Modbus Register	Read/Write	BACnet Object ID	Note
Demand source	00006	Read	001	Current demand source: 0 = Unknown 1 = No source demand 2 = CH 3 = DHW 4 = Lead Lag slave 5 = Lead Lag master 6 = CH frost protection 7 = DHW frost protection 8 = No demand due to burner switch (register 199) turned off 9 = DHW storage 10 = Reserved 11 = Warm weather shutdown 12 = Hot standby
Firing rate	00008	Read	002	Actual firing rate (% or RPM)
Fan speed	00009	Read	003	RPM
Flame signal	00010	Read	004	0.01V or 0.01 µA precision (0.00-50.00V)
Tank temperature sensor	00012	Read	005	-40˚-130˚ (0.1˚C precision)
Appliance setpoint	00017	Read	006	-40˚-130˚ (0.1˚C precision)
Burner status	00032	Read	007	0 = Disabled 1 = Locked out 2-3 = Reserved 4 = Anti-short cycle 5 = Unconfigured safety data 6-33 = Reserved 34 = Standby Hold 35 = Standby Delay
Lockout code	00034	Read	008	0 = No lockout 1-4096
Appliance status	00080	Read	009	0 = Unknown 1 = Disabled 2 = Normal 3 = Suspended
DHW priority count	00082	Read	010	Countdown of time when DHW has priority over CH (secs). Applicable when DHW priority time is enabled.
Burner run time	00130/00131	Read	011	Hours
Controller cycle count	00142/00145	Read	012	0-999,999
Controller run time	00144/00145	Read	013	Hours
Alarm reason	0035	Read	014	0 = None 1 = Lockout 2 = Alert 3 = Other
DHW setpoint	0453	Read/Write	015	40˚-130˚ (0.1˚C precision)

BMS Wiring Diagram

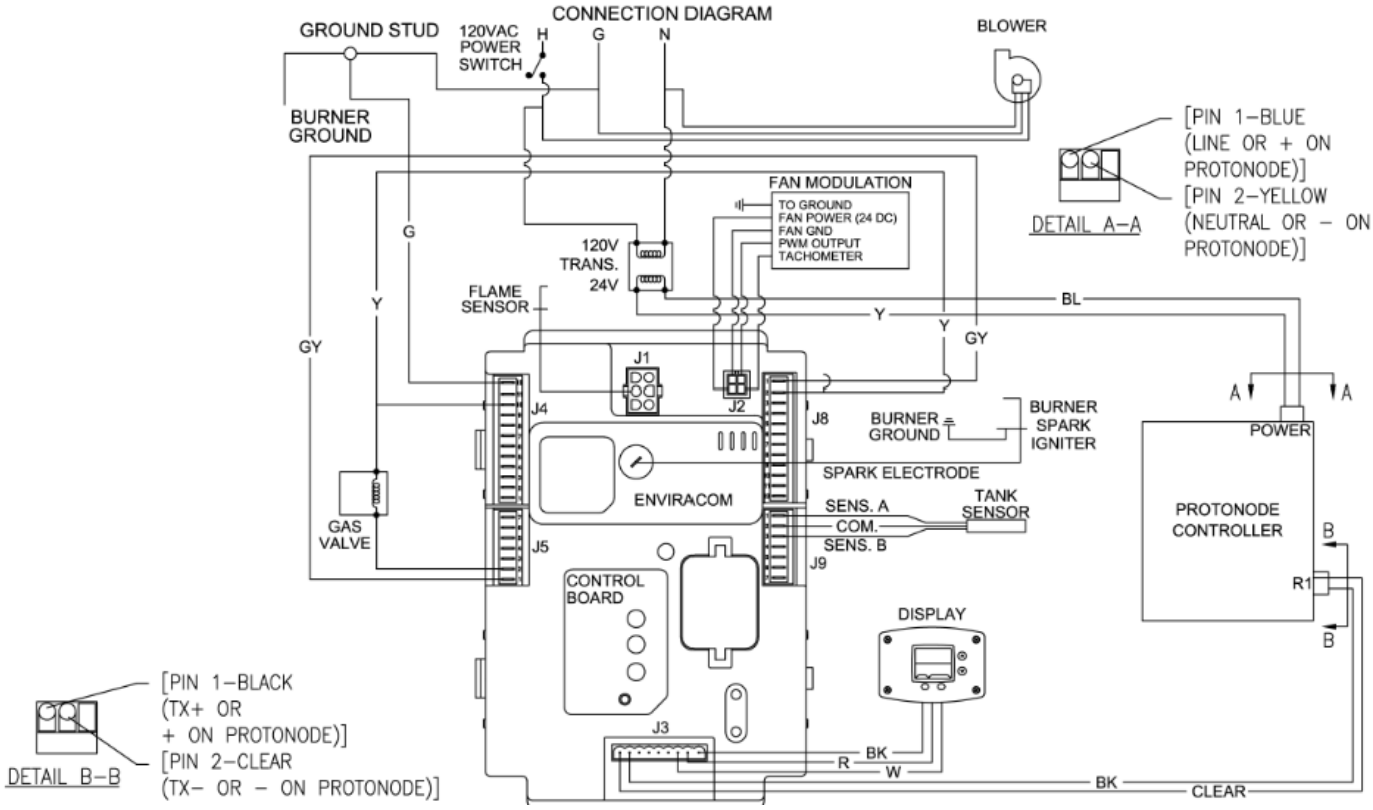

NOTICE

The Building Management System (BMS) is only compatible with units that have SOLA controllers.

Part	Bradford White Part Number
BMS Gateway Installation Kit	**415-53943-00**

SECTION IX: OPERATING INSTRUCTIONS

⚠ WARNING

Water heaters are heat-producing appliances. To avoid damage or injury there must be no materials stored against the water heater or vent system, and proper care must be taken to avoid unnecessary contact (especially by children) with the water heater and vent system. **UNDER NO CIRCUMSTANCES SHOULD FLAMMABLE MATERIALS, SUCH AS GASOLINE OR PAINT THINNER BE USED OR STORED IN THE VICINITY OF THIS WATER HEATER OR IN ANY LOCATION FROM WHICH FUMES COULD REACH THE WATER HEATER.**

Installation or service of this water heater requires ability equivalent to that of a licensed tradesman in the field involved. Plumbing, air supply, venting, gas supply and electrical work are required.

Light the unit in accordance with the operating instructions label attached to the water heater.

Under **NO** circumstances should the input rate exceed the input rate shown on the water heater rating plate. Over firing could result in damage or sooting of the water heater.

If the unit is exposed to the following, **DO NOT** operate water heater until all corrective steps have been made by a factory authorized independent service contractor or qualified service professional.

2. Flooding to or above the level of the burner or controls
2. External firing
3. External firing
4. Damage
5. Firing without water
6. Sooting

NEVER OPERATE THE WATER HEATER WITHOUT FIRST BEING CERTAIN IT IS FILLED WITH WATER AND THAT A TEMPERATURE AND PRESSURE RELIEF VALVE IS INSTALLED IN THE RELIEF VALVE OPENING OF THE WATER HEATER.

General Instructions

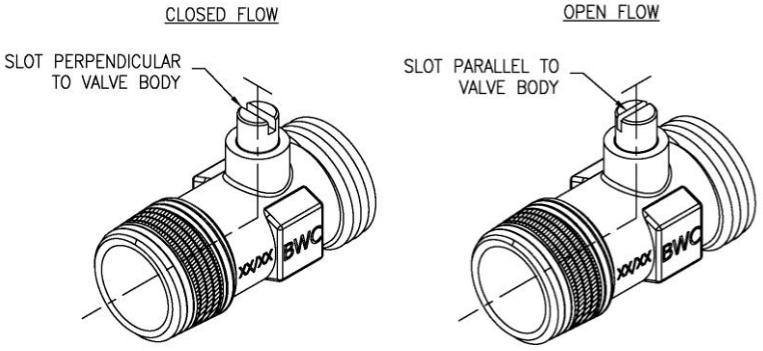

To Fill the Water Heater

1. Close the water heater drain valve. This water heater utilizes a ball valve; when closing the valve, the stem will spin indefinitely. Confirm it is closed by ensuring the slot on the stem is perpendicular to the valve body. If alternative water connections are provided but not used, make certain they are plugged (i.e. space heating & alternate top connections).
2. Open the cold-water supply shut-off valve.
3. Open several hot water faucets to allow air to escape from the system.
4. When a steady stream of water flows from the faucets, the water heater is filled. Close the faucets and check for water leaks at the water heater drain valve, combination temperature and pressure relief valve and the hot and cold-water connections.

Sequence of Operation

1. Thermostat starts with heating cycle.
2. Blower turns ON.
3. Blower pre-purge at reduced speed.
4. Spark rod sparks to the burner and gas valve opens, then the burner ignites.
5. Flame signal confirmed with main burner ON.
6. Blower remains at reduced speed for a short period to stabilize flame.
7. Blower increases to full speed for full input.
8. Thermostat becomes satisfied.
9. Gas valve closes, then the main burner turns OFF.
10. Blower post-purges, then turns OFF.

Lighting and Shutdown Instructions

FOR YOUR SAFETY READ BEFORE LIGHTING

WARNING: If you do not follow these instructions exactly, a fire or explosion may result causing property damage, personal injury or loss of life.

A. This appliance does not have a pilot. It is equipped with an ignition device which automatically lights the burner. Do not try to light the burner by hand.

B. BEFORE OPERATING smell all around the appliance for gas. Be sure to smell next to the floor because some gas is heavier than air and will settle on the floor.

WHAT TO DO IF YOU SMELL GAS:

- Do not try to light any appliance.
- Do not touch any electric switch; do not use any phone in your building.
- Immediately call your gas supplier from a neighbor's phone. Follow the gas supplier's instructions.
- If you cannot reach your gas supplier, call the fire department.

C. Turn off main power to the water heater.

D. Do not use this appliance if any part has been under water. Immediately call a qualified service technician to inspect the appliance and to replace any part of the control system and any gas control which has been under water.

LIGHTING INSTRUCTIONS

1. STOP! read the safety information above on this label.
2. Set the thermostat to lowest setting.
3. Turn off all electrical power to the appliance.
4. This appliance does not have a pilot. It is equipped with an ignition device which automatically lights the burner. Do not try to light the burner by hand.
5. Turn off the main power switch.
6. Wait (5) minutes to clear out any gas. If you then smell gas, STOP! Follow "B" in the safety information above on this label if you don't smell gas, go to next step.
7. Turn on main power switch.
8. Set the thermostat to desired setting.

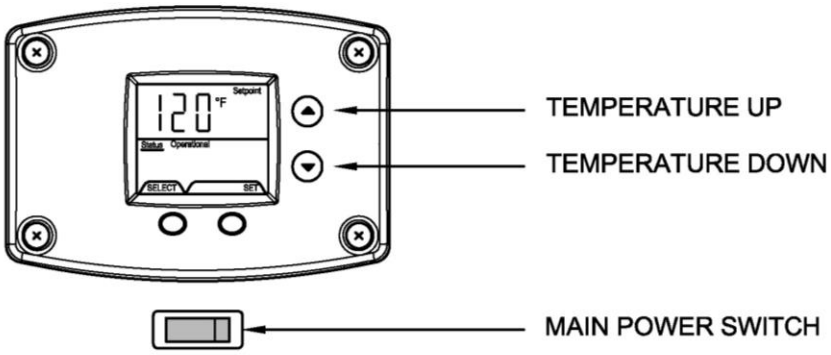

TO TURN OFF GAS TO APPLIANCE

1. Set the thermostat to lowest setting.
2. Turn off the main power switch.

Figure 16 – Lighting Instruction Label

Combustion Air/Gas Ratio

This water heater is factory equipped with a gas valve/air mixing venturi system designed and set to maintain appropriate combustion excess air level (air/gas ratio) under normal operating conditions. When the excess air level is adjusted, an accurate and recently calibrated combustion gas analyzer, which correctly measures carbon monoxide (CO) and carbon dioxide (CO2) levels in the exhaust gas, as well as an accurate gas pressure manometer, are mandatory.

⚠ CAUTION

Carbon monoxide (CO) levels increase with increasing carbon dioxide (CO2) levels. Only individuals, installers or service technicians properly trained, qualified and experienced with adjusting the gas/air mixing venturi system, and with access to accurate equipment, should attempt to adjust the air/gas ratio. See service manual for instructions.

⚠ DANGER

DO NOT adjust the air/gas ratio unless you are qualified, experienced and properly trained in the gas valve/air mixing venturi system air/gas ratio adjustment process and are using accurate, certified CO2, CO and gas pressure measurement equipment.

If the factory set air/gas ratio is changed, the exhaust gas concentration of CO2 and CO and the gas control gas pressure **must** be monitored and properly adjusted no less than every 6 months thereafter.

Temperature Adjustment (24V Control System)

Table 6 – Temperature Adjustment

APPROXIMATE TIME/TEMPERATURE RELATIONSHIPS IN SCALDS	
120°F *(49°C)*	More than 5 minutes
125°F *(52°C)*	1½ to 2 minutes
130°F *(54°C)*	About 30 seconds
135°F *(57°C)*	About 10 seconds
140°F *(60°C)*	Less than 5 seconds
145°F *(63°C)*	Less than 3 seconds
150°F *(66°C)*	About 1½ seconds
155°F *(68°C)*	About 1 second

⚠DANGER

Hotter water increases the risk of scald injury. Scalding may occur within five (5) seconds at a temperature setting of 140°F *(60°C)*. To protect against hot water injury, install an ASSE approved mixing valve in the water system. This valve will reduce point of discharge temperature by mixing cold and hot water in branch water lines. A licensed plumbing professional or local plumbing authority should be consulted.

⚠CAUTION

This water heater, when set at a lower temperature setting, is not capable of producing hot water of sufficient temperature for sanitizing purposes.

This water heater is equipped with an energy cut out device to prevent overheating. Should overheating occur or the gas supply fails to shut off, turn OFF the control panel power switch to the appliance and call a qualified service agency.

NOTICE

The lower the temperature setting, the greater the energy efficiency, both to heat the water and to maintain the storage temperature during standby periods. Lower water temperatures also extend tank like. Remember, no water heating system will provide exact temperatures at all times. Allow for a few days of operation at this setting to determine the correct temperature setting consistent with the requirements for the installation.

The water heater temperature setting is adjusted by using the control display mounted to the front of the water heater. The water heater thermostat is set at the lowest setpoint of 100°F *(37.8°C)* when shipped from the factory. The control display shows the temperature setpoint in degrees Fahrenheit (°F) or degrees Celsius (°C), and the status of the water heater ("Idle" or "Heating"). If the water heater is functioning normally, the display will also show "Operational".

For energy efficient operation of your water heater, the suggested initial temperature setting is 120°F *(49°C).* During the winter season, or any cold period, you may desire a higher temperature setting to adjust for the colder incoming water. This adjustment, however, may cause additional condensation to form on the cooler tank surface. This does **NOT** mean the tank is leaking. During summer months, the warmer incoming water temperatures will benefit the performance of your water heater and reduce the amount of condensation developed.

Condensation does **NOT** mean your tank is leaking. Over 40% of reported tank leaks on installation are proven to be condensation. To avoid unnecessary expense and inconvenience, make sure the tank is leaking, and that it is not condensation, before calling a qualified service professional.

If the water heater is to remain idle for 30 days or more or is subjected to freezing temperatures while shut off, the water heater and piping should be fully drained, and the drain valve should be left fully open. Refer to the "Draining the Water Heater" in this Installation and Operation Manual (page 36) for this procedure.

⚠ WARNING

Hydrogen gas can be produced in an operating water heater that has not had water drawn from the tank for a long period of time (generally two weeks or more). **HYDROGEN GAS IS EXTREMELY FLAMMABLE**. To prevent the possibility of injury under these conditions, we recommend a hot water faucet to be open for several minutes before you use any electrical appliance which is connected to the hot water system. If hydrogen is present, there will be an unusual sound such as air escaping through the pipes as hot water begins to flow. **DO NOT** smoke or have open flame near the faucet at the time it is open.

⚠ WARNING

If the water heater display **does NOT** show "Operational" in the "Status" indicator, there may be an operating malfunction with the water heater. If this is the case, a numeric code will be displayed. Refer to the label next to the display for the definition of the error code and call your plumbing professional or service agent to service the water heater. **DO NOT** try to reset the water heater without having a qualified service person to diagnose and correct the problem. If the display is blank or does not show an error code, make sure there is power to the water heater.

Setting the water temperature to the maximum set point can result in scalding hot water delivered to the faucets. It is highly recommended that the maximum setpoint be adjusted to the lowest temperature possible for the needs of the installation. See following section to change the maximum setpoint limit (max setpoint). Make sure the water heater control display is not in a public area that can result in the temperature settings being improperly adjusted. See previous warnings on scalds and an ASSE approved mixing valve.

NOTICE

When the maximum setpoint is reached, the display will show "Max Setpoint" without the setpoint value. The maximum setting is equal to approximately 180˚F *(82˚C).* The default temperature setpoint from the factory is 100˚F *(37.8˚C).*

Display Control

Water Heater Display and Control Buttons

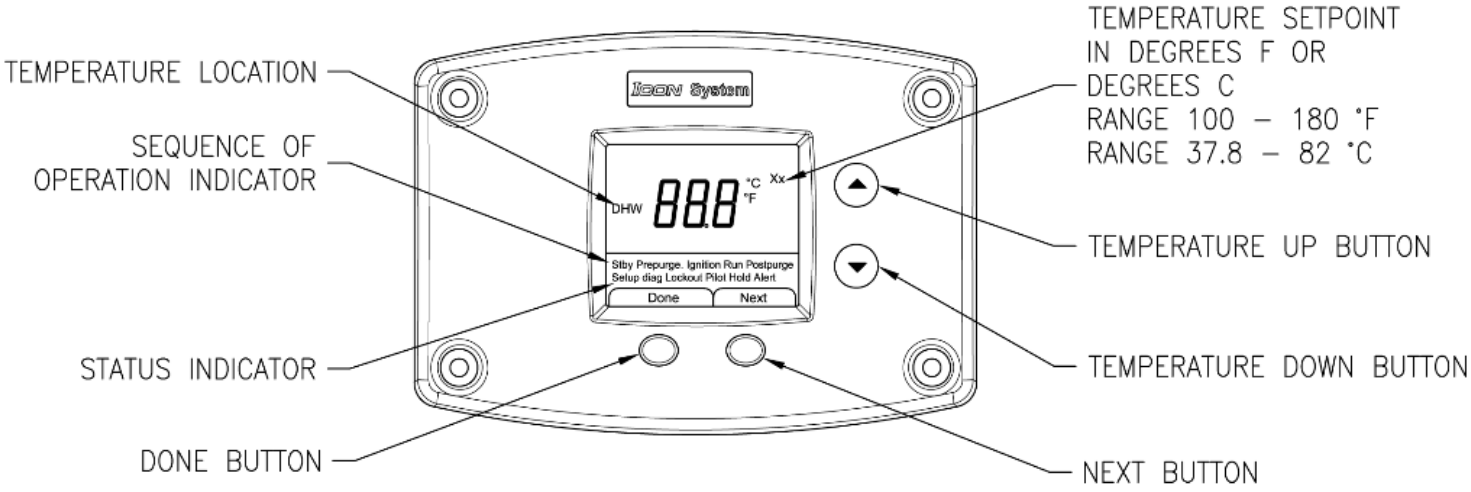

To Increase Temperature Setpoint

Step 1. Press and hold “Temperature Up” button until desired setpoint temperature appears on the display.

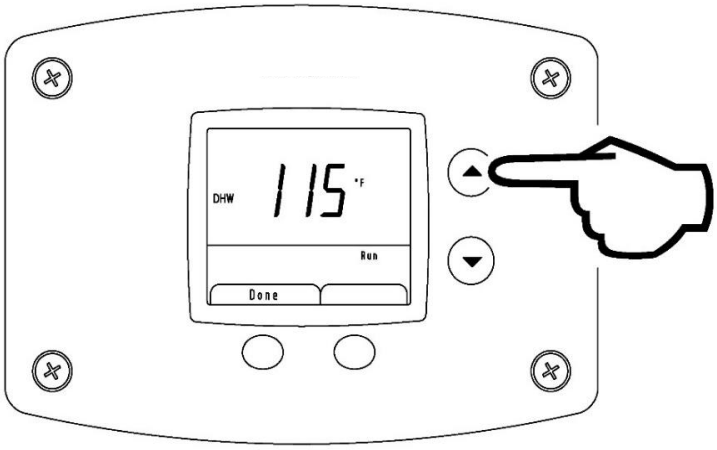

Step 2. Press “DONE” button for new setting to take effect immediately. If the “DONE” button is not pressed, the new temperature setting will take effect in approximately 10 seconds.

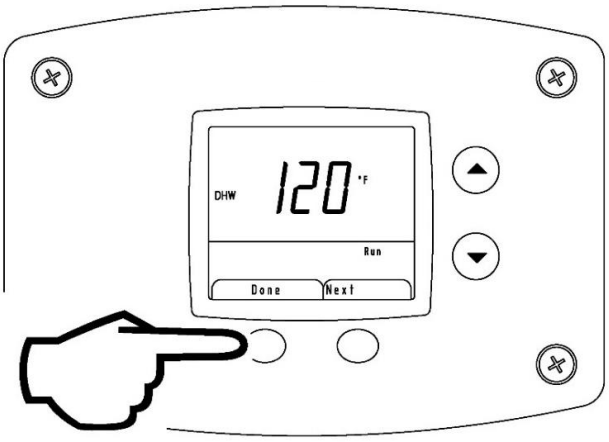

PRESS DONE BUTTON FOR SETTING TO
TO TAKE EFFECT IMMEDIATELY

To Decrease Temperature Setpoint

Step 1. Press and hold “Temperature Down” button until desired setpoint temperature appears on the display.

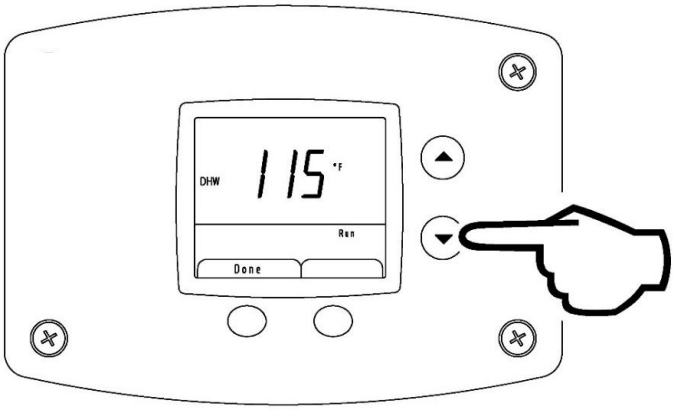

Step 2. Press “DONE” button for new setting to take effect immediately. If the “DONE” button is not pressed, the new temperature setting will take effect in approximately 10 seconds.

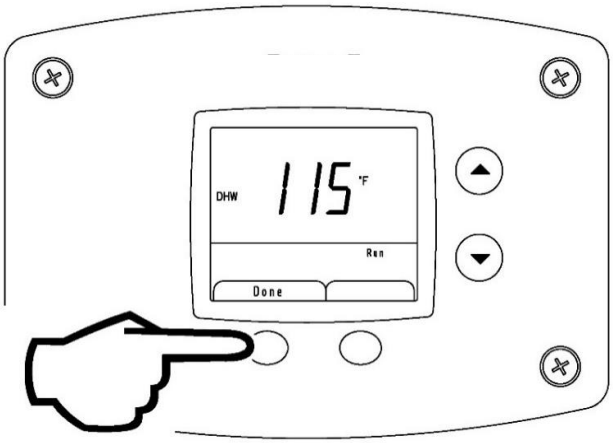

PRESS DONE FOR SETTING TO
TO TAKE EFFECT IMMEDIATELY

To View Combustion Rate

Step 1. Select Next while viewing DHW Setpoint in User Mode to access Rate screen. Rate will only be displayed while the burner is operating.

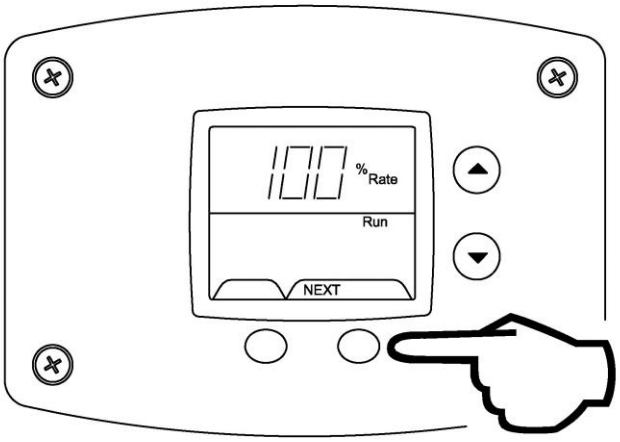

Step 2. Select Next to go back to the DHW Setpoint screen.

To Change Temperature Format in Display from °F to °C or ˚C to ˚F

Step 1. Enter “Set-Up Mode” by pressing both UP/DOWN buttons together for 3 seconds.
Step 2. Use the arrows to select between °F and °C

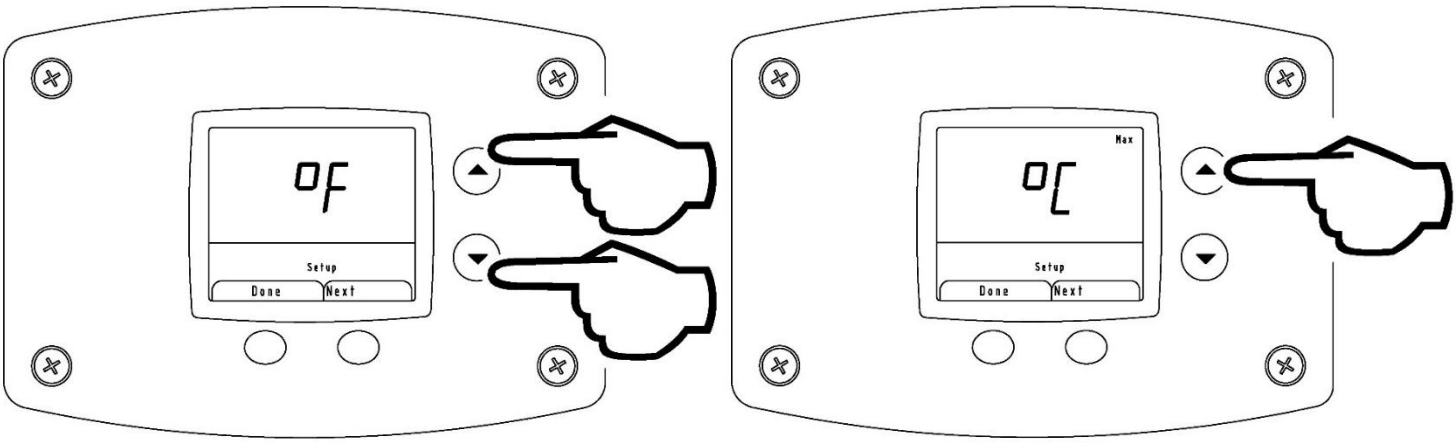

Step 3. Press done to return to main screen or timeout/change will occur in one minute.

Energy Cut Out (ECO)

An automatic gas shut-off device (ECO) is incorporated in the sensor and control board which will shut off gas supply to the burner if the water heater temperature exceeds 207°F *(97.2°C).* Should the ECO function (open), the water temperature should be reduced to approximately 120°F *(49°C)* and follow applicable Lighting Instructions to place the water heater in operation. The water heater must have the problem corrected by a qualified service person before putting the water heater back in operation. It is recommended that all service work be performed by a qualified service agency.

If the water heater is to remain idle for 30 days or more or is subjected to freezing temperatures while shut off, the water heater and piping should be fully drained (see To Drain the Water Heater) and the drain valve should be left fully open.

NOTICE

In the event of an emergency, turn OFF the gas and electric to the appliance. The water heater should be inspected at a minimum annually by a qualified service technician for damaged components and/or joints not sealed. **DO NOT** operate this water heater if any part is found damaged or if any joint is found not sealed.

⚠ WARNING

Water heaters are heat producing appliances. To avoid damage or injury there must be no materials stored against the water heater or vent system, and proper care must be taken to avoid unnecessary contact (especially by children) with the water heater and vent system. **UNDER NO CIRCUMSTANCES SHOULD FLAMMABLE MATERIALS, SUCH AS GASOLINE OR PAINT THINNER BE USED OR STORED IN THE VICINITY OF THIS WATER HEATER, VENT SYSTEM OR IN ANY LOCATION FROM WHICH FUMES COULD REACH THE WATER HEATER OR VENT SYSTEM.**

SECTION X: MAINTENANCE

⚠ DANGER

DO NOT attempt to repair gas valve.
DO NOT attempt to repair ignition module.
DO NOT attempt to repair venturi.
DO NOT attempt to repair thermostat board.
DO NOT attempt to repair transformer.
DO NOT attempt to repair flow switch.

⚠ WARNING

To avoid damage or injury, there must be no materials stored against the water heater or vent-air intake system, and proper care must be taken to avoid unnecessary contact (especially by children) with the water heater and vent-air intake system. **UNDER NO CIRCUMSTANCES SHOULD FLAMMABLE MATERIALS, SUCH AS GASOLINE OR PAINT THINNER BE USED OR STORED IN THE VICINITY OF THIS WATER HEATER, VENT-AIR INTAKE SYSTEM OR IN ANY LOCATION FROM WHICH FUMES COULD REACH THE WATER HEATER OR VENT-AIR INTAKE SYSTEM.**

⚠ WARNING

KEEP APPLIANCE AREA CLEAR AND FREE FROM COMBUSTIBLE MATERIALS, GASOLINE AND OTHER FLAMMABLE VAPORS AND LIQUIDS.

General

Water heater maintenance includes monthly tank flushing, cleaning, and removal of lime scale. The unit should be inspected and adjusted to maintain proper combustion. Refer to Table 7-Suggested Maintenance Schedule (page 36). An annual inspection of the venting system should be made.

Burner Flame Check

At the time of installation and at monthly intervals, a visual check of the burner flames should be made to determine if they are burning properly. The main burner may be seen through the sight glass window on the side of the combustion insert mounting bracket (see Figure 17). The burner flames should be a blue flame near the burner surface in a uniform flame pattern. Occasional yellow or white streaks are normal.

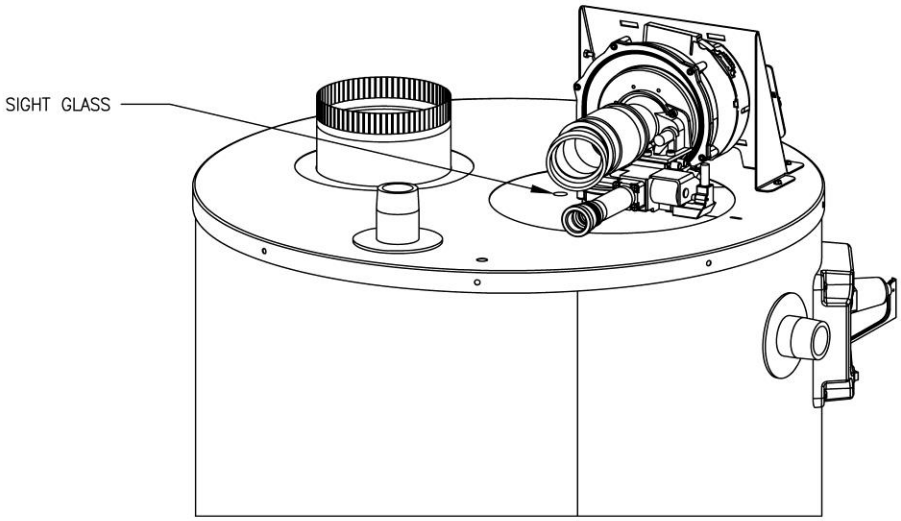

Figure 17 – Sight Glass Location

Maintenance Schedule

Following are the instructions for performing some of the recommended maintenance. Unit inspection and adjustment should only be performed by a qualified technician.

Table 7 – Suggested Maintenance Schedule

Service Interval	Component	Operation	Action
1 Month:	Tank	Sediment removal	Drain off several gallons of water.
	Condensate Line	Inspect & clean	Clear drainline and trap, verify proper pitch.
1 Year:	Powered Anode System	Check LED/inspect rods	1st year: check rods to determine service interval; check LED annually.
	Relief Valve	Function test	Operate lever, inspect for blockage or corrosion.
	Vent & Air Intake System	Inspect	Inspect joint seals/vent supports; clean air filter accessory kit if used.
	Vent Terminals	Free of blockage & debris	Clear intake and exhaust terminals, clean terminal screens.
	Combustion System	Inspect & clean	Clean flame sensor, igniter, & inspect burner.

Flushing the Water Heater

1. Turn OFF the water heater electrical disconnect switch.
2. Open the drain valve and allow water to flow until it runs clean.
3. Close the drain valve when finished flushing.
4. Turn ON the water heater electrical disconnect switch.

Filling the Water Heater

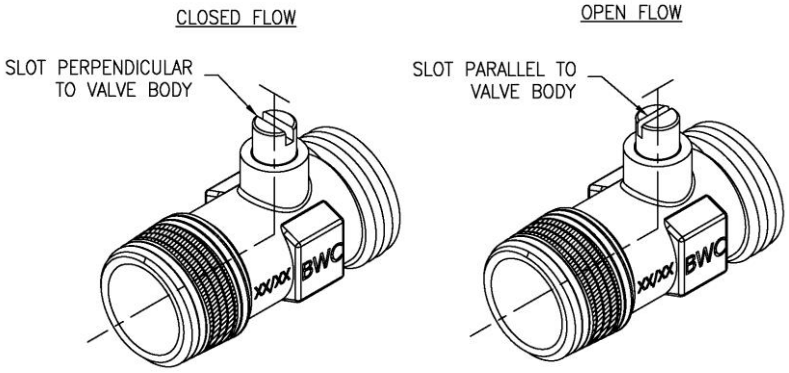

1. Close the water heater drain valve. This water heater utilizes a ball valve; when closing the valve, the stem will spin indefinitely. Confirm it is closed by ensuring the slot on the stem is perpendicular to the valve body. If alternative water connections are provided but not used, make certain they are plugged (i.e. space heating & alternate top connections).
2. Open the cold-water supply shut-off valve.
3. Open several hot water faucets to allow air to escape from the system.
4. When a steady stream of water flows from the faucets, the water heater is filled. Close the faucets and check for water leaks at the water heater drain valve, combination temperature and pressure relief valve, and the hot and cold-water connections.

Draining the Water Heater

The water heater must be drained if it is to be shut down and exposed to freezing temperatures. Some maintenance and service procedures may also require draining the water heater.

1. Turn OFF the water heater electrical disconnect switch.
2. Connect a hose to the drain valve.
3. Locate the hose discharge in an area where hot water will not cause any damage or injury.
4. Close the cold-water inlet valve to water heater.
5. Open a nearby hot water faucet to vent the system.
6. Open the heater drain valve.
7. If the water heater is being drained for an extended shutdown, it is suggested the drain valve be left open during this period.

Drain Valve and Tank Access Panel

The water heaters are equipped with a ¾ inch drain valve.
An access panel covers the cleanout opening in the tank, which is sealed by a gasket and cover.

Sediment and Lime Scale Removal

Waterborne impurities consist of the particles of soil and sand, which settle out and form a layer of sediment on the bottom of the tank. The amount of calcium carbonate (lime) released from water is in direct proportion to water temperature and usage. The higher the water temperature or water usage, the more lime deposits are dropped out of the water. This is the lime scale which forms in pipes, water heaters, and on cooking utensils. Lime accumulation not only reduces the life of the equipment but also reduces efficiency of the water heater and increases fuel consumption.

The usage of water softening equipment greatly reduces the hardness of the water. However, this equipment does not always remove all of the hardness (lime). For this reason, it is recommended that a regular schedule of deliming be maintained. The depth of the buildup should be measured periodically. Water heaters will have about 3 in *(7.6 cm)* of lime buildup when the level of lime has reached the bottom of the cleanout opening or about 1 in *(2.5 cm)* of lime buildup if it has reached the drain valve opening. A schedule for deliming should be set up, based on the amount of time it would take for a 1/2 in *(1.3 cm)* of lime to build up.

Example: Initial inspection shows a ½ in *(1.3 cm)* of lime accumulation. Therefore, the water heater should be delimed once a year.

To Remove Sediment and Lime Scale

1. Drain the heater. Refer to Draining the Water Heater instructions in this section.
2. Remove the outer cover plate from lower side of water heater jacket.
3. Remove the cover and gasket from cleanout opening.
4. Remove the lime, scale, or sediment while using care not to damage the glass-lining.
5. Inspect the cleanout plate gasket. Replace the gasket if necessary (contact local distributor for correct part number).
6. Install the gasket and cleanout plate. Be sure to draw the plate up tight by tightening screws securely.
7. Close the drain valve. Open a hot water fixture to allow air to escape. Open the cold-water supply to water heater and allow the tank to fill. Follow the lighting instructions.
8. Check for water leakage.
9. Install the outer jacket cover plate.

Anode Inspection and Replacement

This water heater is equipped with multiple sacrificial anodes. Anodes protect the glass-lined tank from corrosion by sacrificing themselves through electrolysis. When the anode material is consumed, there is no more protection and corrosion of the tank accelerates.

Inspection of the anode every 6 months allows you to identify the rate of anode degradation. The anode should be replaced when its diameter is 3/8 in *(1 cm)*, or annually whichever is first. Aggressive, very hot, and/or softened water causes rapid consumption of the anode requiring frequent inspections. The replacement anodes rods are available from your plumbing professional.

To Inspect or Replace an Anode

The anodes on this water heater are easily accessible from the top of the water heater making replacement simple and quick. Use the following procedure to remove and inspect the anodes.

1. Drain the heater. Refer to Draining the Water Heater instructions in this section.
2. Flush the heater. Refer to Flushing the Water Heater instructions in this section.
3. Remove the plastic plug covering the anode.
4. Remove the anode using a socket of the appropriate size. Sometimes a breaker bar will need to be used. **Do NOT** use an impact wrench.
5. Inspect and replace the anode as required. Use pipe tape or sealant when reinstalling the anode.
6. Close the drain valve. Open a hot water fixture to allow air to escape. Open the cold-water supply to water heater and allow the tank to fill.
7. Check your anode and drain valve for leaks.
8. Replace the plastic cover that covers the anode.
9. Follow the lighting instructions.

Temperature and Pressure Relief Valve

At least twice a year, the temperature and pressure relief valve should be checked to ensure that it is in operating condition. To check the relief valve, lift the lever at the end of the valve several times. The valve should seat properly and operate freely.

If water does not flow, remove and inspect for obstructions or corrosion. Replace with a new valve of the recommended size as necessary. A thorough inspection of the valve should be performed at least every three years by removing the temperature and relief valve from the tank. **Do NOT** attempt to repair the valve, as this could result in improper operation and a tank explosion. In areas with poor water conditions, it may be necessary to inspect the T&P valve more often than the recommended maintenance schedule.

⚠ CAUTION

Before manually operating the valve, make sure that a drain line has been attached to the valve to direct the discharge to an open drain. Failure to take this precaution could mean contact with extremely hot water passing out of the valve during this checking operation.

If the temperature and pressure relief valve on the water heater discharges periodically or continuously, it may be due to thermal expansion of water in a closed water supply system, or it may be due to a faulty relief valve.

Thermal expansion is the normal response of water when it is heated. In a closed system, thermal expansion will cause the system pressure to build until the relief valve actuation pressure is equaled. Then, the relief valve will open, allowing some water to escape, slightly lowering the pressure. Contact your water supplier or local plumbing inspector on how to control this situation.

⚠ WARNING

DO NOT plug the temperature and pressure relief valve. This is **NOT** a solution and can create a hazardous situation.

Vent and Air Intake System

Examine the vent and air intake system every 3 months. Points of inspection are as follows:

1. Check for obstructions and/or deterioration of vent piping and vent terminal. Replace immediately where needed.
2. Vent pipe and vent terminal screen should be cleaned of any foreign material. The screen is located inside the vent terminal outlet and is accessible from the outside of the vent terminal elbow. **Do NOT** reach inside the vent terminal when the water heater is in operation.
3. Check all venting system connections for leakage and reseal as required.

Combustion System Inspection

Inspect the operation of the combustion system monthly. Use the following procedure to inspect the combustion system.

1. Turn OFF the main power switch of the water heater.
2. Adjust the thermostat to the minimum setting.
3. Remove the top of the combustion surround by unlatching it.
4. While observing the ignition module, turn on the main power switch.
5. Adjust thermostat to the maximum setting.
6. Watch the ignition display as the controller goes through the sequence of operation as previously described.
7. Upon ignition, observe the main burner flame.
8. Readjust thermostat to previous setting.
9. Replace combustion surround top and latch it securely in place.

⚠ WARNING

DO NOT run out of propane gas. Damage to the water heater may occur.

SECTION XI: SERVICE AND TROUBLESHOOTING GUIDE

Sequence of Operations

1. Thermostat calls for heat.
2. Combustion blower starts at a “soft” start light off.
3. Blower pre-purge period of approximately 15 seconds.
4. Ignition control board runs an internal verification safety check for approximately 15 seconds.
5. Trial for ignition (approximately 5 seconds per trial, 3 trials total):
   a. Flame establishing period (3 seconds), gas valve opens, sparks from spark rod to burner surface to ignite the gas.
   b. Burner on, flame proving period (2 seconds). Requires a minimum of 1 microamp through the flame sense rod to prove flame.
6. Once the flame signal is verified, the blower will remain at the “soft” start RPM for 5 seconds to stabilize the flame. After this 5 second period the blower will increase RPM to full power.
7. Steady state operation – Burner continues to operate until:
   a. The thermostat circuit opens, gas valve closes, and blower continues to operate for 30 second post-purge period.
8. As the temperature of the water increases towards the set point of the thermostat, the RPM of the blower will reduce (“soft” off) until the thermostat set point is reached. This reduction of the blower’s RPM will vary with the rate of change between the thermostat temperature and set point. For example: The faster the temperature climbs towards the thermostat set point, the larger the reduction of blower RPM will take place. The lowest RPM setting the blower will drive to is the “soft” start light of level of approximately 3,000 RPM.
9. Thermostat is satisfied.
10. Gas valve closes and burner is extinguished.
11. Blower post purge for 30 seconds at maximum RPM.

Additional Display Features

Accessing Diagnostic Mode on the Water Heater Display
(FOR SERVICE PERSONNEL ONLY)

The display has a Diagnostic Mode to access information in aiding servicing of the water heater. This procedure is for service and installation personnel only. To enter the Diagnostic Mode, follow the steps illustrated below:

⚠ WARNING

The following procedure is for **service and installation personnel ONLY**. Resetting lockout conditions without correcting the malfunction can result in a hazardous condition.

Step 1. Press and hold the lower right button under “Next” in the lower right display for at least 3 seconds. You must be in user mode on the DHW temp screen to access diagnostic mode. If in user mode on the view rate screen, you cannot access diagnostic mode.

NOTICE

The screens will stay in the Diagnostic Mode for 12.5 minutes after the last button press for viewing unless “Done” button is pressed to exit Diagnostic Mode.

Step 2. In the first screen of diagnostic mode the display will show the flame sense current in microamps when the burner is operating.

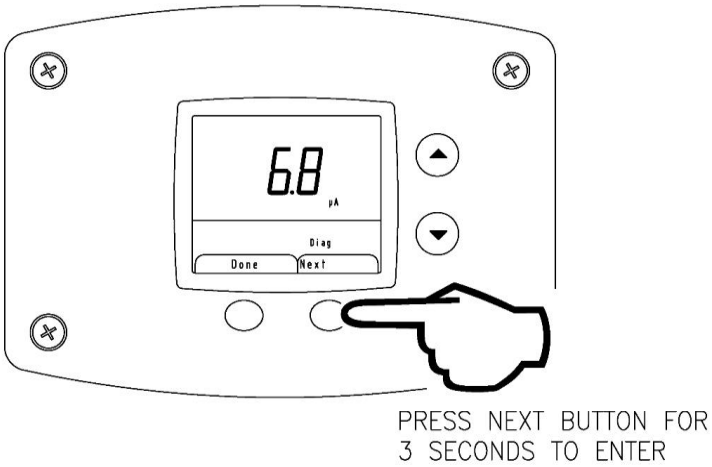

Step 3. Press the lower right “Next” button. The display will flash and show the number of any alert codes. These are **not** currently used.

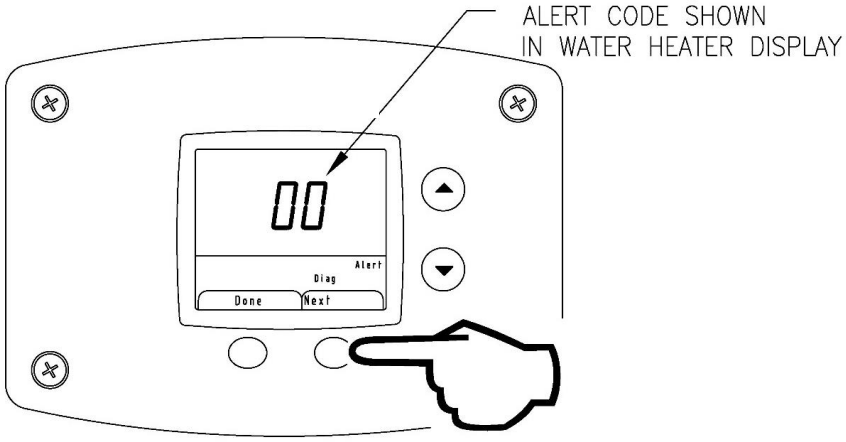

Step 4. Press lower right “Next” button. The display will flash and show the number of any Lockout codes. If there are no lockouts, the display will show 00. If there are multiple lockout codes “Next” will scroll through them.

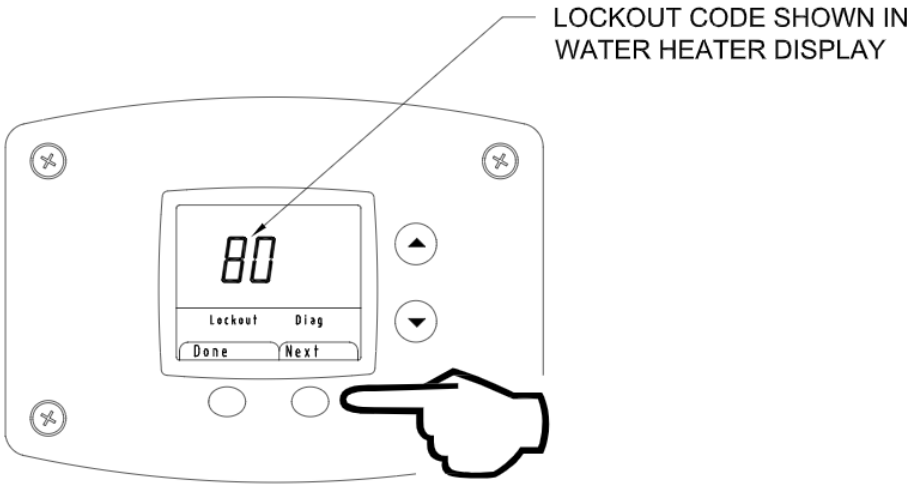

Step 5. Press “Next”, the display will show “DHW MAX”. This is the maximum allowable temperature that the unit can get to before a lockout occurs.

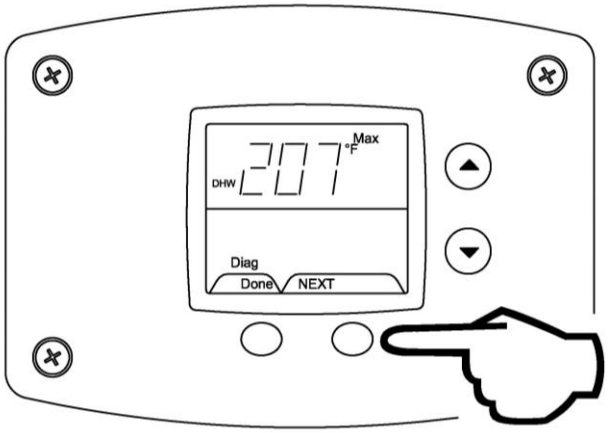

Step 6. Press Next, display will show “DELTA T DHW”, this is the real time temperature reading of the tank.

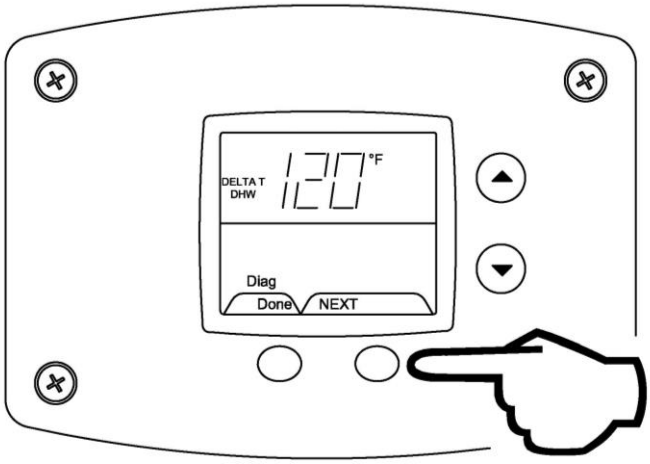

Step 7. Press “Done” to exit Diagnostic Mode and return to the DHW setpoint in User Mode.

NOTICE

The ICON control system can produce soft and hard lockouts. Soft lockouts are displayed if active and are not stored in Diagnostic Mode history. The control will periodically attempt to resume normal operation when in soft lockout conditions. If the system resumes normal operation a soft lockout will clear instantly; hard lockouts will display if active and require manual reset. Up to ten previous Hard lockouts are logged chronologically (newest first) in Diagnostic Mode history.

Service Error Codes and Troubleshooting Procedures

Error Code	Definition of Code	Cause of Problem and Actions Taken to Correct
No code – blank display	No power to the unit or switch is off.	• Check power supply to the water heater. • Make sure water heater is plugged in and the breaker is on. • Check if there is 120 volts power supply to the LINE connections on the control board. • Verify 24 volts at display. • Check for loose wires, defective transformer. • Check wire harness connections from display to the control board.
9,22	Low flame sense signal	• Check microamp output of flame sense • Inspect flame sensor and wire • Inspect burner for debris
49	Voltage too low or high	• Measure the incoming line voltage. • Voltage should be 115-125 volts. • If the voltage is not within this range or there is drastic fluctuation, then have the incoming power supply checked. • If the line voltage is satisfactory, check the output from the transformer to make sure it is 22-26 volts. • Replace transformer or wiring if defective.
53	AC Inputs phase reversed	• Check the module and display connections. • Check the module power supply and make sure that frequency, voltage and VA capacity of the transformer meet specifications. • Check to make sure the wiring connections on the control module from terminals J4-10 and J8-2 are connected.
62	Fan speed not proved	• Check the pulse width modulation (PWM) wire harness connection from the blower to the control module. • Make sure the pin terminals make solid contact. • Measure the resistance of each wire in the wire harness from the terminal ends. • Replace wire harness if defective. • If value remains out of range, this hold will change to lockout 123 (defined below)
80	High Limit (Overheat Condition)	• Check the wiring from the water temperature sensor to the control module. • Measure the resistance of each outside wire to the center wire. Measure the tank temperature and compare with the chart below. • If either outside wire has a much different resistance reading, replace the sensor. • Make sure the sensor is securely held inside the well with the clip. • If the problem persists and the sensor and wiring check O.K., then replace the control module.
93	Water temperature sensor fault	• Appears after alert 172, defined below. • Check the water temperature sensor wire harness from the sensor to the control module. • Make sure there are no loose connections to the control plug. • Check the resistance reading from each of the outside wires to the center (common) wire. Measure the tank temperature and compare with the chart below. • If the ohm readings are not fairly close, replace the sensor. • Replace the control module if the problem persists and the sensor and wire connections are not defective.

Error Code	Definition of Code	Cause of Problem and Actions Taken to Correct
105	Flame detected out of sequence	• Check to see if flame is present inside the combustion chamber before or after the ignition cycle. • If so, check to make sure the gas valve is wired correctly. • Check for voltage at the gas valve connection. • Replace the gas valve if defective. • If no flame is visible outside of the ignition sequence/run cycle, then make sure the flame sensor is wired to the correct terminal. • Make sure the ignition cable is not crossing the flame sensor wire or ignition ground wires. • If problem persists and all other checks have been verified, replace the control module.
109, 110	Ignition Failure Occurred.	• Burner failed to light or stay lit after 4 retries. • Hold condition – will reattempt ignition after 15 minute waiting period. A log will be stored in service history. • Check gas valve wiring and gas valve operation during the ignition cycle. • If burner lights but quickly goes out, check the flame sensor wire or the flame sensor. • If the flame sensor rod is badly corroded with deposits, clean with sandpaper or replace. • Check the inlet gas supply to make sure the pressure is sufficient and does not drop after the gas valve opens. • Make sure the combustion blower is operating during the ignition and run cycle. • Check the venting system to make sure the inlet and exhaust terminals and venting system is not blocked.
122,123	Light-off Rate Proving Failed	• If blower speed is not verified from the PWM (Pulse Width Modulation) signal within 5 minutes, the previously described error code “62” changes from a hold condition to this lockout code condition • Check the harness and pin terminals for a good connection to the control module. • Replace the blower or control module if the wire harness is good.
172	Water temperature sensor resistance invalid	• Hold 93 will be displayed if this value remains out of range • Measure the resistance of the water temperature sensor and compare it with the tank temperature using the chart below.

NOTE		• If there is do display, check primary/secondary voltage
		• Before troubleshooting always verify the following
		  ○ Gas inlet pressure
		  ○ Static to dynamic gas pressure drop
		  ○ No vent and intake restrictions
		  ○ All wire connections are tight
		  ○ No grounded wires or missing grounds
		  ○ No water leaks

Procedure for Checking Thermostat Sensors

Set the thermostat above water temperature (See temperature adjustment section) and observe system through one (1) complete cycle. Make sure system operates as desired.

To check the upper sensor assembly, compare the resistance of the sensor terminals (yellow and black lead for upper sensor) as measured by an ohmmeter to the water temperature as measured by an accurate thermometer. Thermistor resistance increases as the temperature decreases. The tables below show the correct sensor resistance at various temperatures. Replace the sensor if the ohm reading in the chart does not approximate the reading from the sensor at the temperature measured in the tank.

In Degrees F										
°F	**0**	**1**	**2**	**3**	**4**	**5**	**6**	**7**	**8**	**9**
40	26109	25400	24712	24045	23399	22771	22163	21573	21000	20445
50	19906	19383	18876	18383	17905	17440	16990	16553	16128	15715
60	15314	14925	14548	14180	13823	13477	13140	12812	12494	12185
70	11884	11592	11308	11032	10763	10502	10248	10000	9760	9526
80	9299	9078	8862	8653	8449	8250	8057	7869	7685	7507
90	7333	7165	7000	6839	6683	6531	6383	6238	6098	5961
100	5827	5697	5570	5446	5326	5208	5094	4982	4873	4767
110	4663	4562	4464	4368	4274	4183	4094	4006	3922	3839
120	3758	3679	3602	3527	3453	3382	3312	3244	3177	3112
130	3048	2986	2925	2866	2808	2752	3697	3643	2590	2538
140	2488	2439	2391	2344	2298	2253	2209	2166	2124	2083
150	2043	2004	1966	1928	1891	1856	1820	1786	1753	1720
160	1688	1656	1625	1595	1566	1567	1509	1481	1454	1427
170	1402	1376	1351	1327	1303	1280	1257	1235	1213	1191
180	1170	1150	1129	1110	1090	1071	1053	1035	1017	999
190	982	965	949	933	917	901	886	871	857	842
200	828	814	801	788	775	762	749	737	725	713

In Degrees C										
°C	**0**	**1**	**2**	**3**	**4**	**5**	**6**	**7**	**8**	**9**
0	32648	31026	29495	28049	26682	25389	24166	23010	21915	20879
10	19898	18968	18088	17253	16461	15710	14998	14322	13680	13071
20	12492	11942	11419	10922	10450	10000	9572	9165	8778	8409
30	8057	7722	7403	7099	6808	8532	6268	6016	5775	5546
40	5327	5117	4917	4726	4543	4368	4201	4042	3889	3742
50	3602	3468	3340	3217	3099	2986	2878	2774	2675	2579
60	2488	2400	2316	2235	2157	2083	2011	1942	1876	1813
70	1752	1693	1637	1582	1530	1480	1432	1385	1340	1297
80	1256	1216	1177	1140	1105	1070	1037	1005	974	944
90	916	888	861	835	810	786	763	741	719	698

Contact your local plumbing supplier or plumbing professional for replacement parts or contact the company at the address displayed on the rating plater of the water heater.

For faster and better service, please provide the part name, model, and serial number(s) of the water heater(s) when ordering parts.

READ THE WARRANTY FOR A FULL EXPLANATION OF THE LENGTH OF TIME THAT PARTS AND THE WATER HEATER ARE WARRANTED.

This product is covered under one or more of the following patents and or patent pending applications:

CA2,430,807 CA2,844,271 EP1369647 GB1369647 NL1369647 TWI276761 US7,559,293 US7,900,589 US7,007,748 CA2,476,685 US7,063,132 CA2,409,271 US6,684,821 US7,337,517 US7,665,211 US7,665,210 US7,699,026 CA2,504,824 US6,935,280 AU2007201423 CA2,583,609 EP1840484 GB1840484 NL0840484 US7,634,976 US7,270,087 US7/621,238 US7,334,419 US7,866,168 CA2,491,181 US7,063,133 CA2,677,549 US8,082,888 AU2007201424 CA2,583,108 EP1840481 GB1840481 NL1840481 CA2,659,534 US7,971,560 US7,992,526 US8,146,772 US8,707,558 CA2,548,958 MX243220 US6,422,178 TWI649522 US9,429,337 CA3,001,716 GB2558134 GB2013252.8 US10,866,010 US17/109,618 US10,503,183 US20/42096 CA2,949,830 DE112015002523.5 GB2540513 US9,574,792 US15/436,425 CA3,059,965 EP18784108.5 MX/a/2019/012268 US15/486,816 US17/038,087 US7,007,316 US7,243,381 CA2,784,312 US8,787,742 DE112014002713.8 GB2533862 US9,964,241 US6,644,393 US8,851,022 USD636,857 US8,931,438 CA2,899,271 US10,495,343 CA2,918,211 US10,094,619 US15/621,063 US16/474,833 US16/281,599

Complete the following information and retain for future reference:

Model No: _____

Serial No: _____

Service Phone

Days: _____ Nights: _____

Address: _____

Supplier: _____

Supplier Phone No: _____

Refer to the parts list on www.bradfordwhite.com for a complete parts listing and expanded views of the models covered in this manual.

NOTES

NOTES

NOTES